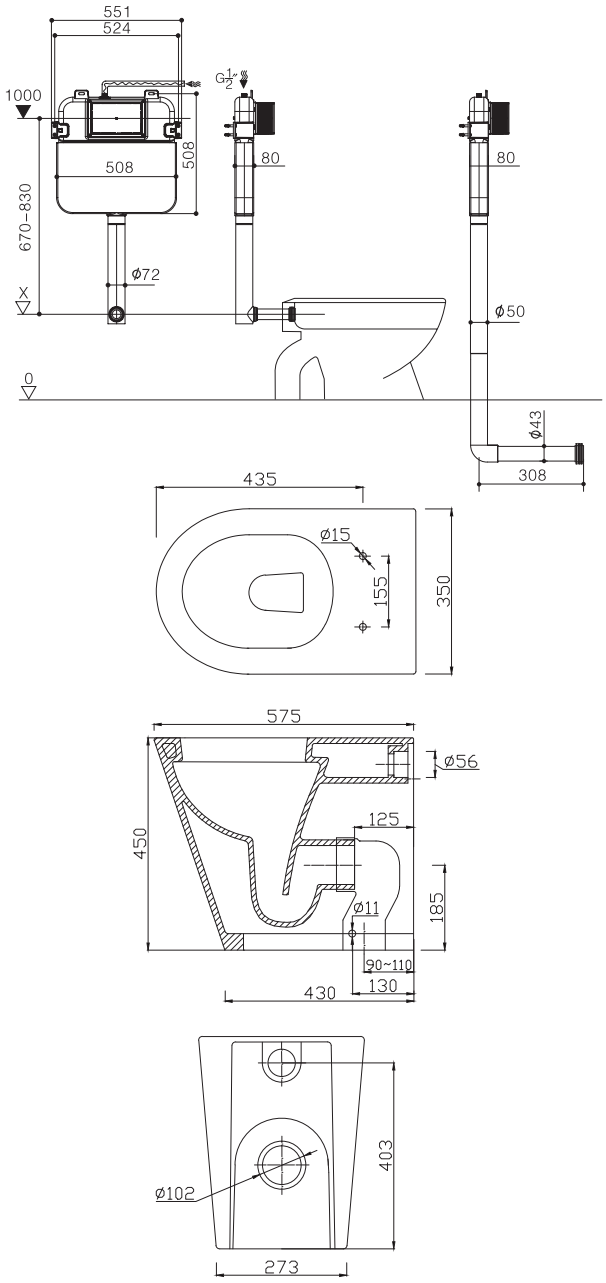

BASSINI

Extra Height Wall Faced Toilet Suite

PRODUCT CODE: **HARMONY10600**

FEATURES:

RIM CONFIGURATION	Box Rim
WASTE OUTLET	S or P Trap using Universal Connector
INLET	Top Inlet
SEAT	Soft-Close
COLOUR	White
MATERIAL	Vitreous China Pan
PAN SET-OUT	90-110mm
WEIGHT	30kg Pan, 6kg Cistern
FLUSHING (Ltr)	4.5 Litres Full Flush, 3.0 Litres Half Flush, 3.5 Litres Average Flush
WELS RATING	4 Star
AUSTRALIAN STANDARDS	AS1172.1-2014 AS1172.2-2014
WARRANTY	10 Years Pan & Cistern, 2 Years Seat, 5 Years Valves, 1 Year Push Buttons

harmonybathroomware.com.au

The more stars the more water efficient

WATER RATING
www.waterrating.gov.au

3.5 litres average flush

4.5 L per full flush / 3 L per half flush

In accordance with AS/NZS 6400

Licence No. I642

Plumbing Plus
Bathroom Kitchen Laundry Pty Ltd

WaterMark

AS 1172.1 - AS 1172.2
Certificate No. 23263

VERSION DATE: 2019/03

DISCLAIMER: The installation of this toilet suite should be undertaken by a qualified and licensed plumber and in accordance with the National Plumbing Code AS/NZS 3500.2.2. Harmony sanitaryware products are designed to meet the appropriate Australian standards. Dimensions and set-outs contained are correct at the time of publication. However, neither the manufacturer nor the distributor takes responsibility for printing errors. The manufacturer and the distributor reserve the right to vary specifications or delete toilet suite models without prior notification. A failure to follow the installation instructions, or a failure to have the product installed by a licensed tradesperson, may void the product's warranty.