Constant Voltage Phase/Triac dimmable driver---50W series PWM output

■ Features:

· Output constant voltage
· Universal AC input: 100-130VAC
· High efficiency :up to 84%
· Protection:short circuit/over loading/over current/ Over temperature
· Full protection plastic housing
· Easy installation
· Cooling by free air convection
· Compatible with Forward phase,Magnetic low voltage,Triac Dimmers
· Strong compatibility, flicker-free dimming
· Suitable for LED lighting and moving sign applications and others
· Provide with a junction box for power supply and output connection
· IP20 They are suitable for dry or damp location use

■ Specification

Model		KVP-12050-TDLJ	KVP-24050-TDLJ
Certificates		ETL,cETL,FCC	ETL,cETL,FCC
Output	DC Voltage	12V	24V
	Voltage Tolerance	±0.5V	
	Rated current	4.17A	2.08A
	Rated power	50W	
Input	Voltage Range	100-130VAC	
	Frequency Range	47～63HZ	
	Power Factor	0.65 (Full loading)	
	Efficiency（Typ.）	81%	84%
	AC Current（Max.）	1.6A	1.6A
	Leakage current	＜0.50mA/120VAC	
Protection	Short Circuit	Hiccup mode, recovers automatically after fault condition is removed	
	Over Current	≤1.2*I out	
	Over Loading	≤120%	
	Over temperature	100℃±10℃ (The output voltage will turn off when the temperature is higher then100℃±10℃, after the temperature drop off ,it will recovery automatic	
Environment	Working TEMP.	-40～+60℃	
	Working Humidity	20～90%RH, non-condensing	
	Storage TEMP. Humidity	-40～+80℃，10～95%RH	
	TEMP .coefficient	±0.03%/℃（0～50℃）	
	Vibration	10～500Hz，2G 12min./1 cycle,period for 72min. each along X,Y,Z axes	
Safety& EMC	Safety standards	UL8750+UL1310 Class 2 unit	
	Withstand voltage	I/P-O/P:1500VAC	
	Isolation resistance	I/P-O/P：100MΩ/500VDC/25℃/70%RH	
	EMC EMISSION	FCC Part 15 B	
Others	Net. Weight	0.82kg=0.35kg(driver)+0.47kg (J10)	0.87kg=0.35(driver)+0. 52kg(J12-3)
	Size	350*77*26mm（L*W*H）	350*77*37mm（L*W*H）
	Packing	430*375*150mm 20PCS/CTN	430*375*190mm 20PCS/CTN

Notes	1. All parameters if NOT specially mentioned are measured at 120VAC input , rated load and 25℃ of ambient temperature. 2. To extend the driver's using life ,please reduce the loading at lower input voltage. 3.Loading should be 5-100%.

■ KVP series 50W Phase/Triac Dimmable driver Mechanical Specification

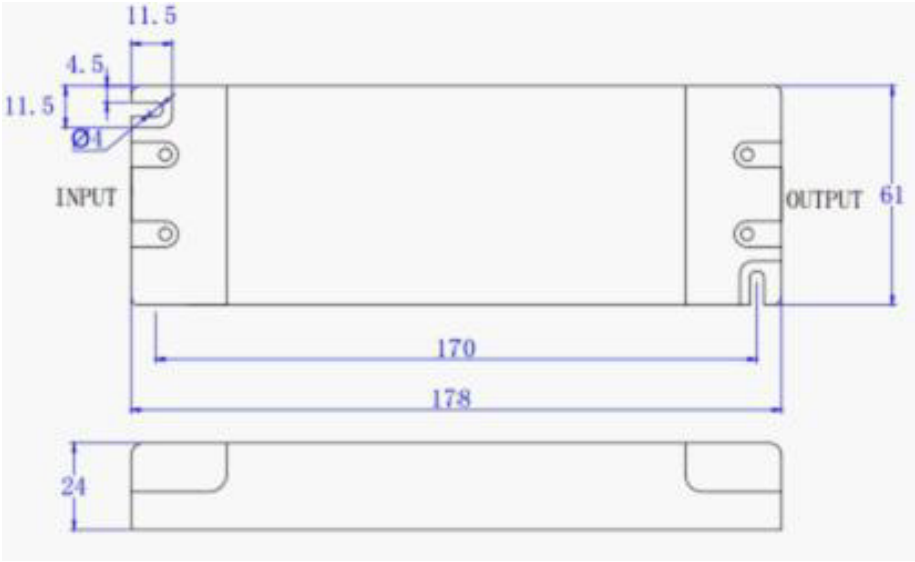

■ Real picture & Mechanical Specification of 50W Phase/Triac Dimmable Driver with junction box -1

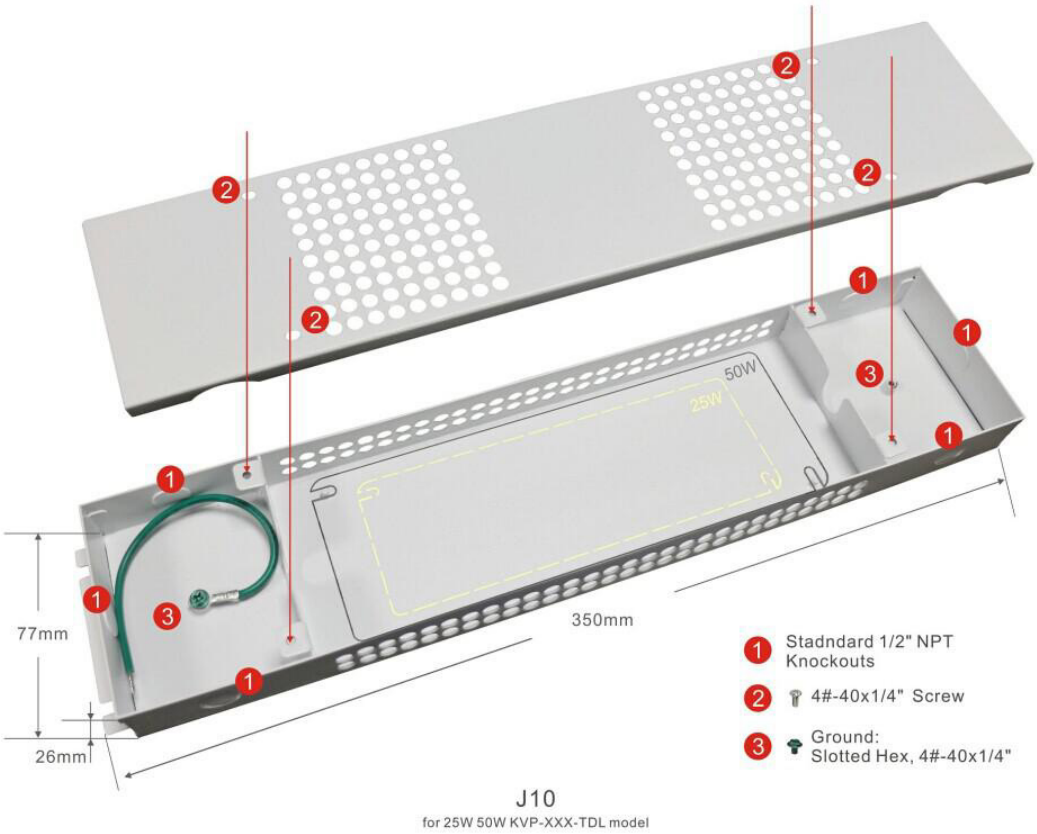

J10
for 25W 50W KVP-XXX-TDL model

Constant Voltage Phase/Triac dimmable driver---50W series PWM output

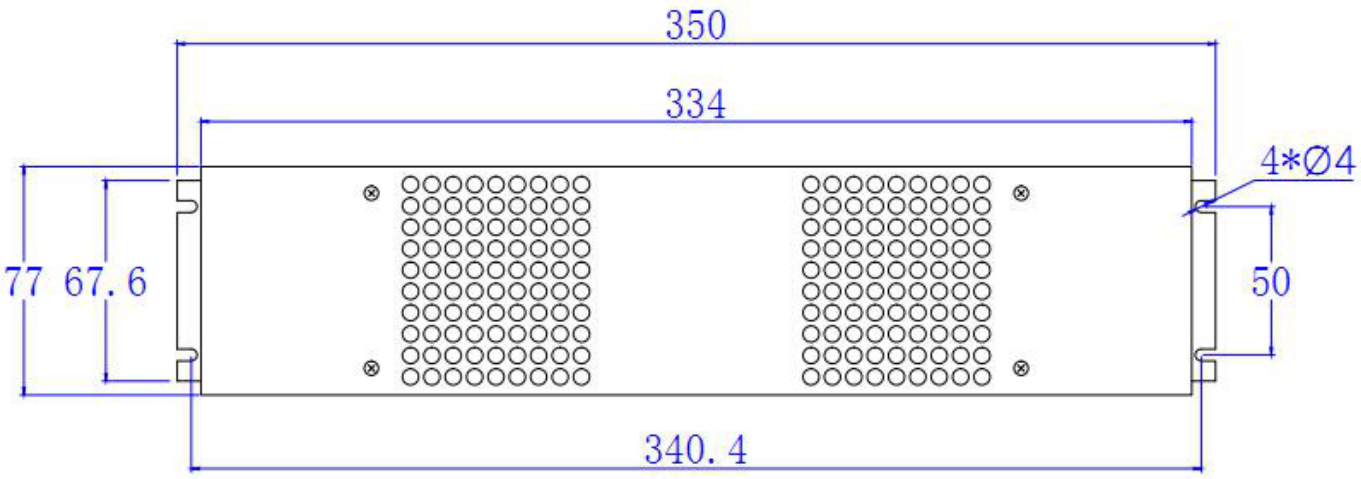

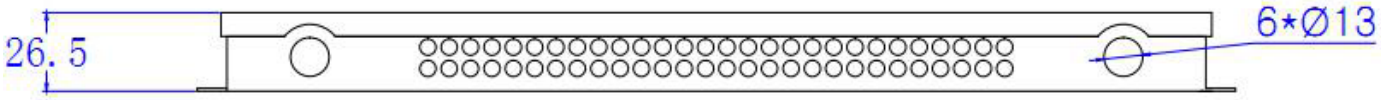

■ **Real picture & Mechanical Specification of 50W Phase/Triac Dimmable Driver with junction box -2**

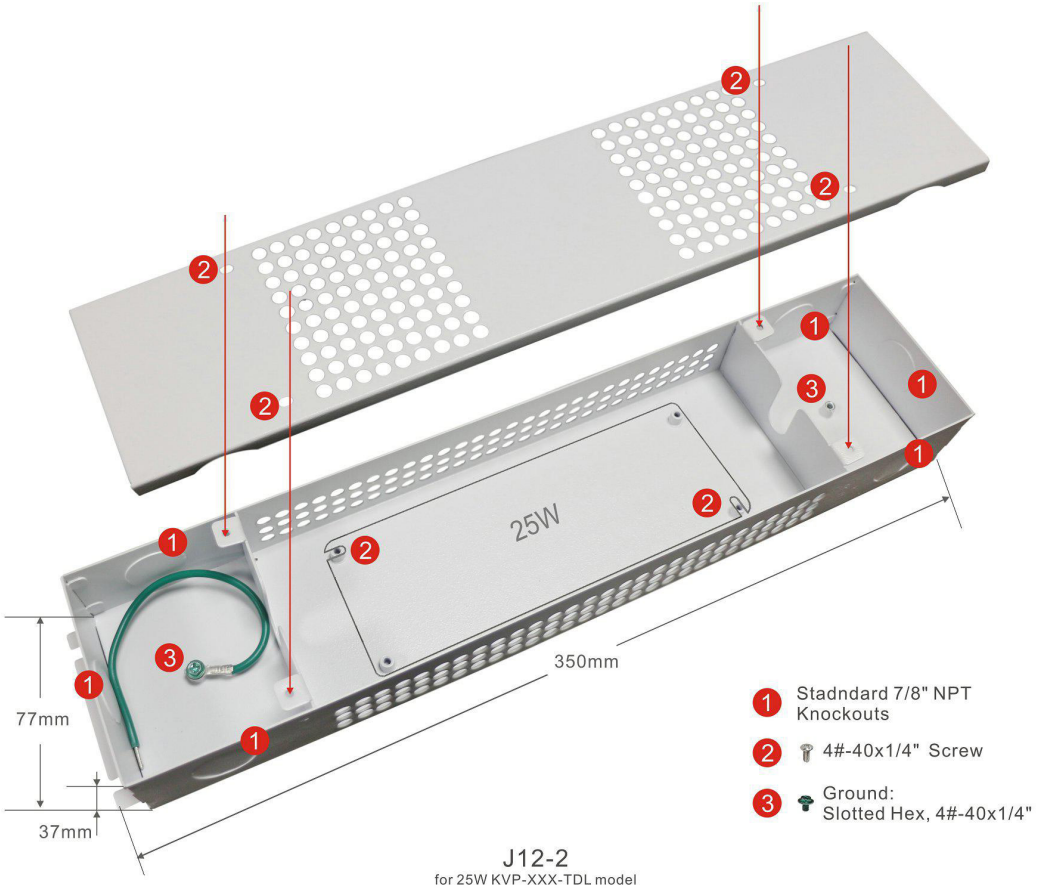

J12-2
for 25W KVP-XXX-TDL model

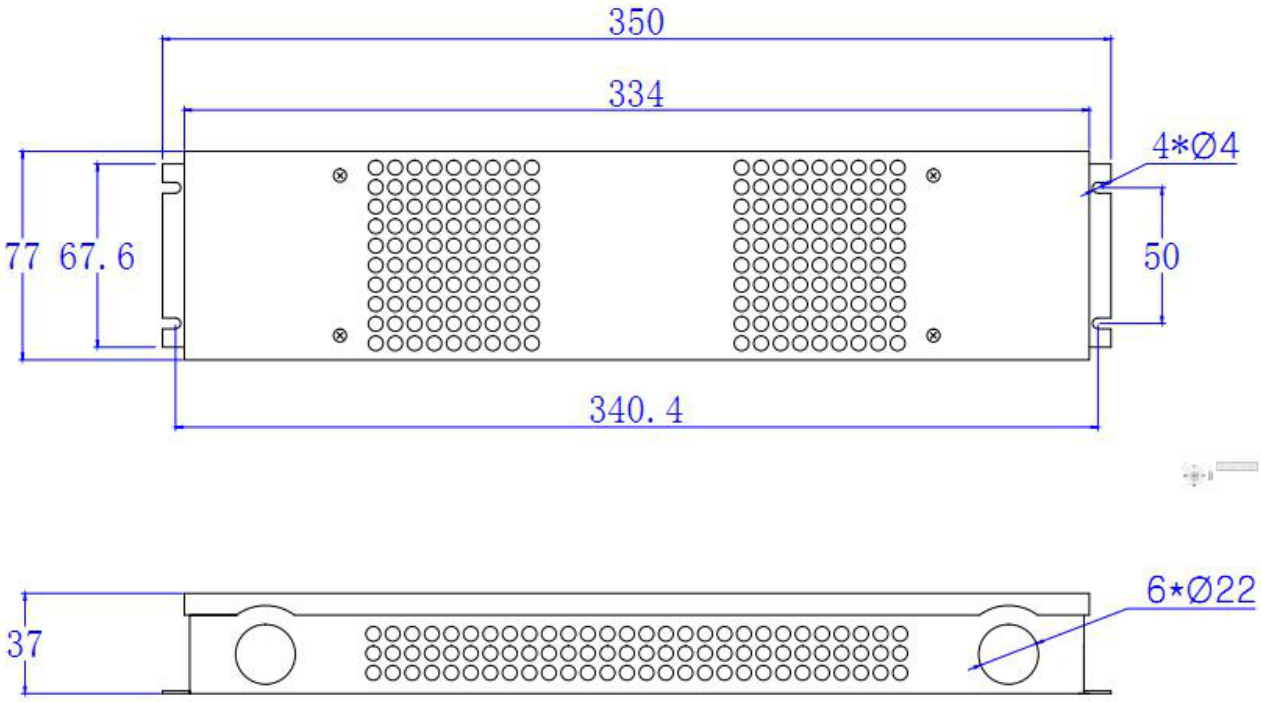

※ Input (L) and (N) with wires to be connected AC.

※ Output : (LED+) (LED-)

■ Dimming Operation

※The Pulse-Width Modulation (PWM) of output voltage can be adjusted through input terminal of the AC phase line(L) by connection a triac dimmer.

※Usually matching with leading edge/Forward Phase Triac Dimmers(Can customized as a driver only matching trailing edge/reverse phase Triac Dimmers if needed).

※Please try to use dimmers with power at least 2.5 times as the output power of the driver.

※for Forward phase,Magnetic low voltage and Triac Dimmers

■ Warning

※Prevent to reverse polarity;

※Risk of Electric Shock. When used outdoors, install only on a circuit protected by a Class A GFCI;

※Risk of Fire. Installation involves special wiring methods to run wiring through a building structure. Consult a qualified electrician;

※Risk of Electric Shock. Mount the unit at a height greater than 1 foot from the ground surface.

■ Derating Curve

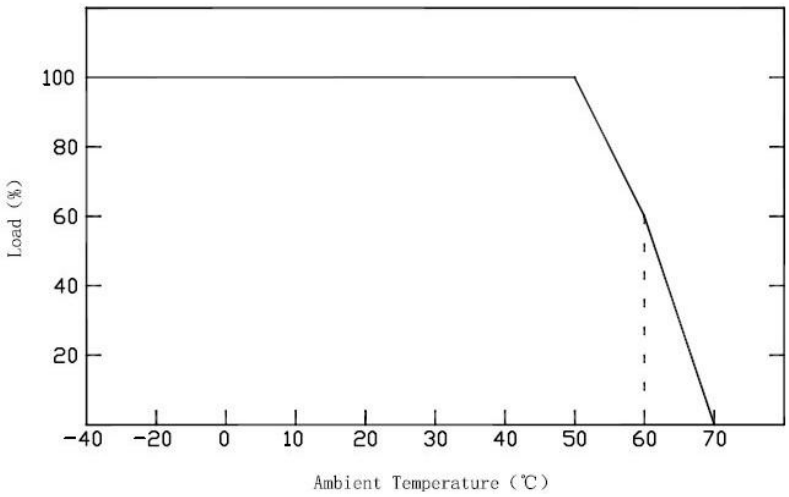

※To extend their life, please refer to the Derating Curve and derate according to the temperature.

■ **Single Driver** Connecting Diagram

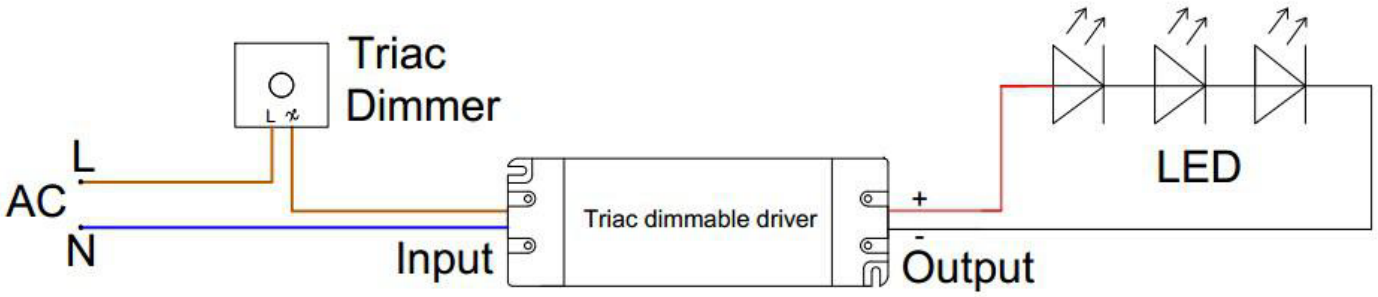

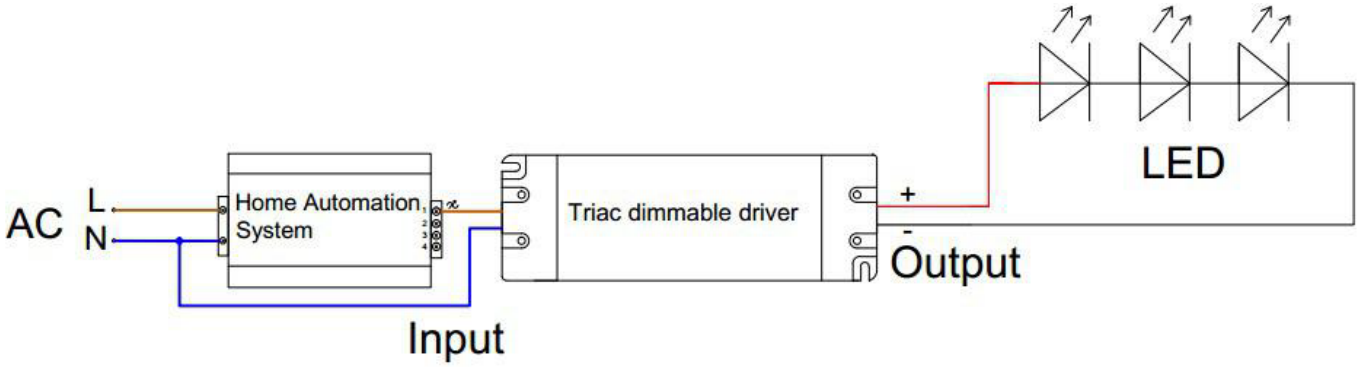

■ **Multiple Drivers Connecting Diagram**

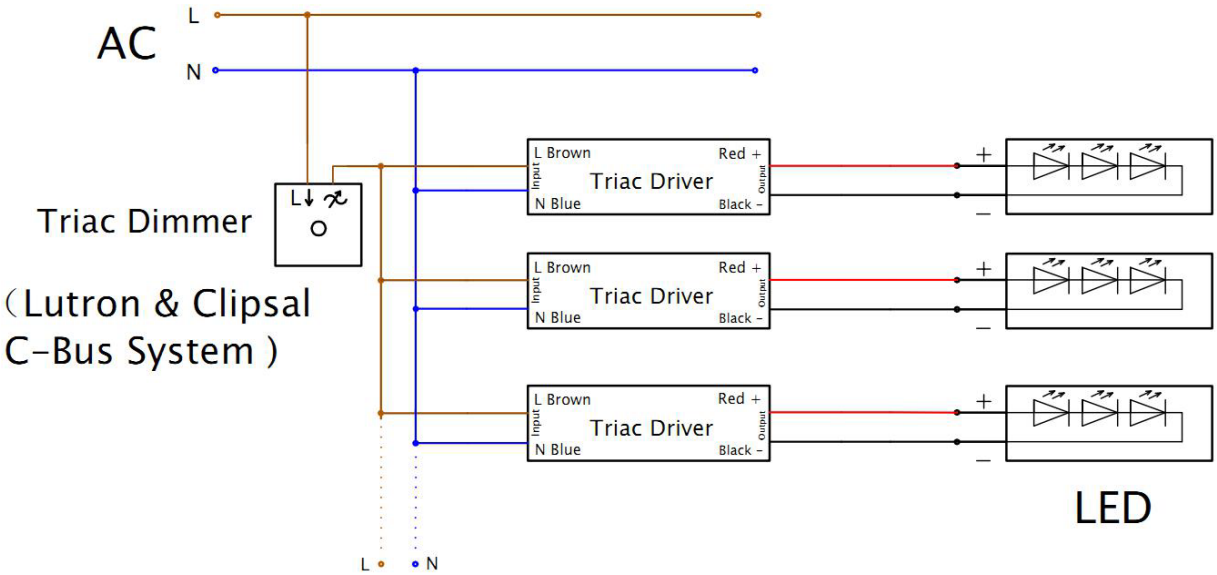
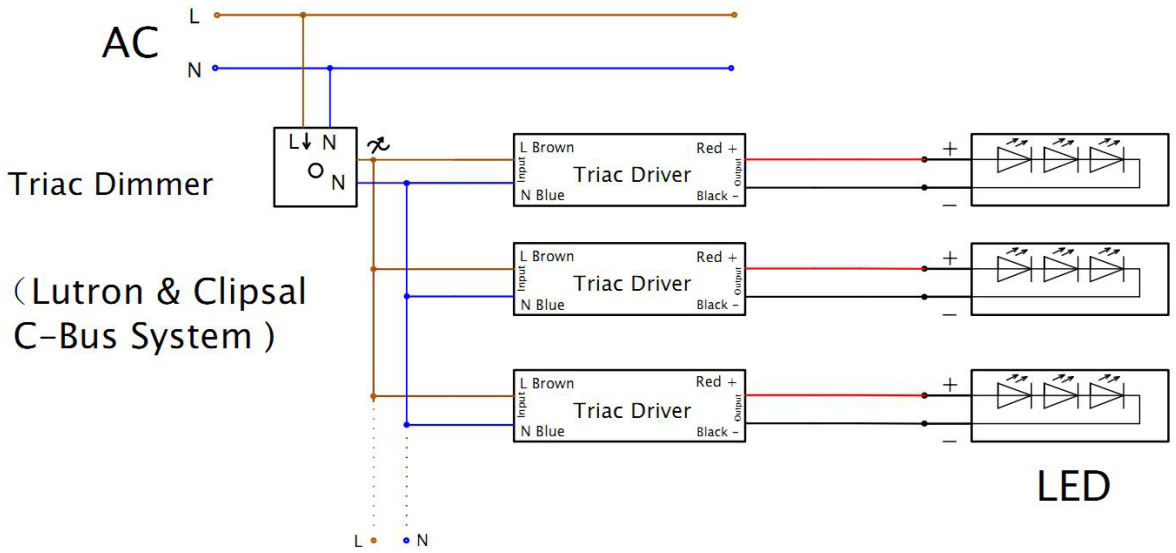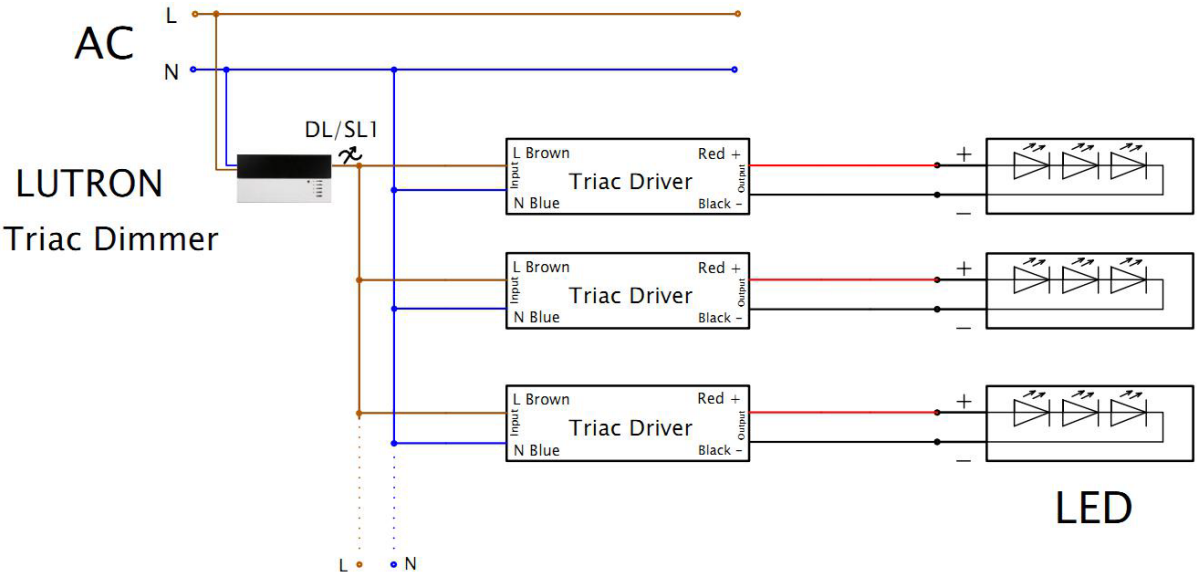
Constant Voltage Phase/Triac dimmable driver---50W series PWM output