LED Linear Light

L-8456 in Single Run / Continuous Run (0-10V Dimming)

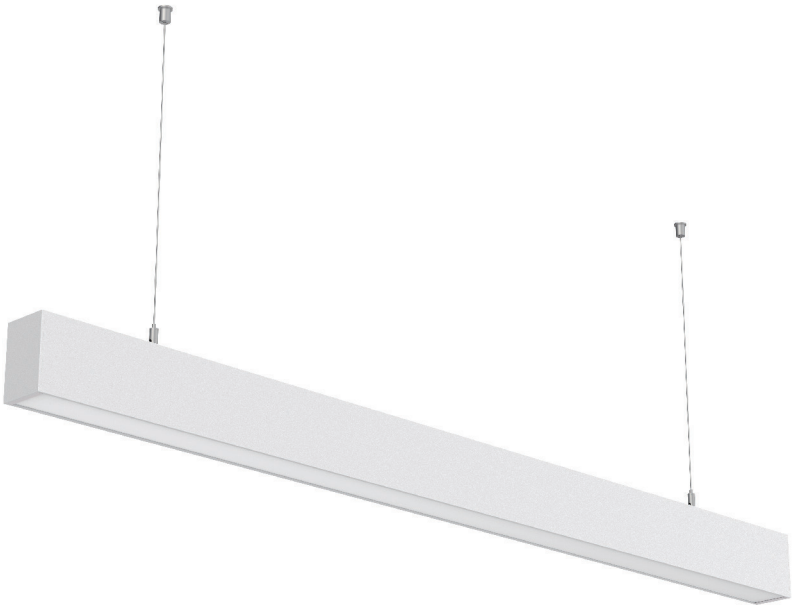

Description

L-8456 linear light is combination of separated structures, it is convenient to dismantle and maintain because of its replaceable power supply and lightingemitting parts(PCB+LEDs), simple shape and random jointing can be realized IP40 waterproof, it is can be widely used in home, school,shopping mall, hotel and other indoor public placesand it is mainly made of aluminum alloy, PC.

Features

Can be widely used in home, school, shopping mall, hotel and other indoor public places.

Features

1. The product can operate in single run or continuous runs seamless, when input voltage is AC277V, Max 3600W(350feet) can be connected; when input voltage is 110V, Max 1500W(150feet) can be connected.

2.The lamp and power supply is connected with high-voltage live part via connector; it is very convenient to install and disassemble, and it is also safe and reliable to use

3.Lamp body adopt 6063 aluminum profile, optional white, black and silver

4.PC diffusor and AL6063 aluminum profile,with good heat distribution and high light efficiency.

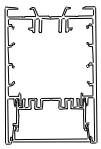

5.The end cap, power supply,emitting parts can be disassembled, convenient to maintain.

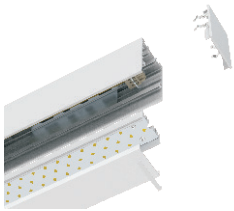

6.2 installation methods, suspendent installatione ceiling installation.

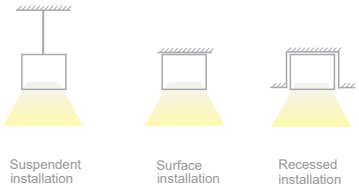

7. Multiple jointing can realized via"十" "L" shape connecting accessories

Lamp

Model	CCT	LED Type	LED pcs	Lumen(lm) (±10%)	Power(W) (±10%)	Length (feet)	Voltage (V)	Dimming Optional	Pre-wired
L-8456-40-4-X-5000K	5000K	2835	260	4320lm	40W	4	AC100-277V 50/60Hz	0-10V Dimming	5 wires, 14AWG copper core,L,N,G, DIM+,DIM-
L-8456-40-4-X-4000K	4000K		260	4280lm	40W	4			
L-8456-40-4-X-3000K	3000K		260	4120lm	40W	4			
L-8456-75-8-X-5000K	5000K	2835	462	7875lm	75W	8			
L-8456-75-8-X-4000K	4000K		462	7725lm	75W	8			
L-8456-75-8-X-3000K	3000K		462	7650lm	75W	8			

“L” shape lamp

Model	CCT	LED Type	LED pcs	Lumen(lm) (±10%)	Power(W) (±10%)	Length (feet)	Voltage (V)	Dimming Optional	Pre-wired
L-8456L-40-4-X-5000K	5000K	2835	216	4280lm	40W	2*2	AC100-277V 50/60Hz	0-10V Dimming	5 wires, 14AWG copper core,L,N,G, DIM+,DIM-
L-8456L-40-4-X-4000K	4000K		216	4120lm	40W	2*2			
L-8456L-40-4-X-3000K	3000K		216	4080lm	40W	2*2			

“+” shape lamp

Model	CCT	LED Type	LED pcs	Lumen(lm) (±10%)	Power(W) (±10%)	Length (feet)	Voltage (V)	Dimming Optional	Pre-wired
L-8456R-40-4-X-5000K	5000K	2835	216	4400lm	40W	2*2	AC100-277V 50/60Hz	0-10V Dimming	5 wires, 14AWG copper core,L,N,G, DIM+,DIM-
L-8456R-40-4-X-4000K	4000K		216	4320lm	40W	2*2			
L-8456R-40-4-X-3000K	3000K		216	4240lm	40W	2*2			

Beam angle	Energy saving	PF	CRI	IP	Life span	Lamp material
110°	90%	>0. 95	⩾80	IP40	30000hrs	Aluminum alloy+PC

Dimensions(Unit:mm/inch)

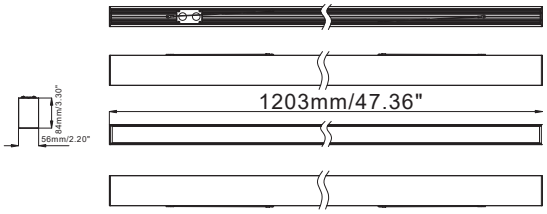

All dimension tolerance is± 1mm unless otherwise noted.

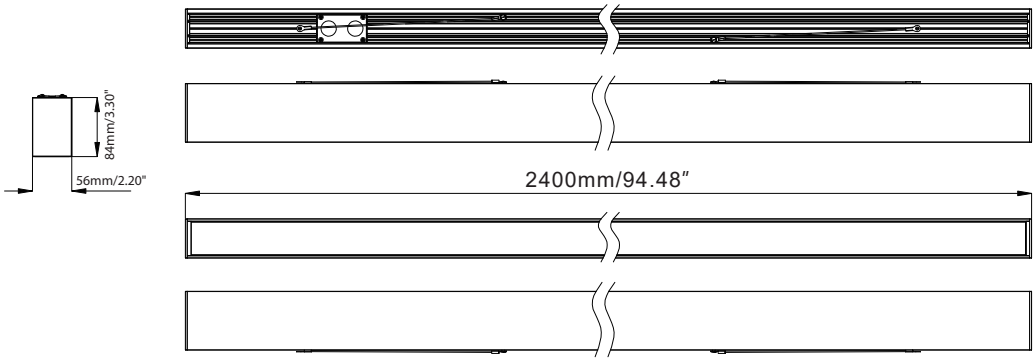

All dimension tolerance is± 2mm unless otherwise noted.

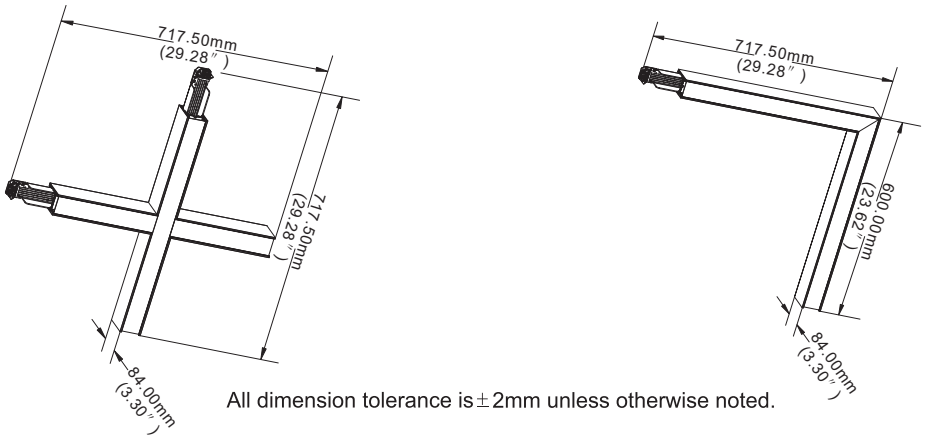

All dimension tolerance is ±2mm unless otherwise noted.

Electrical Connection

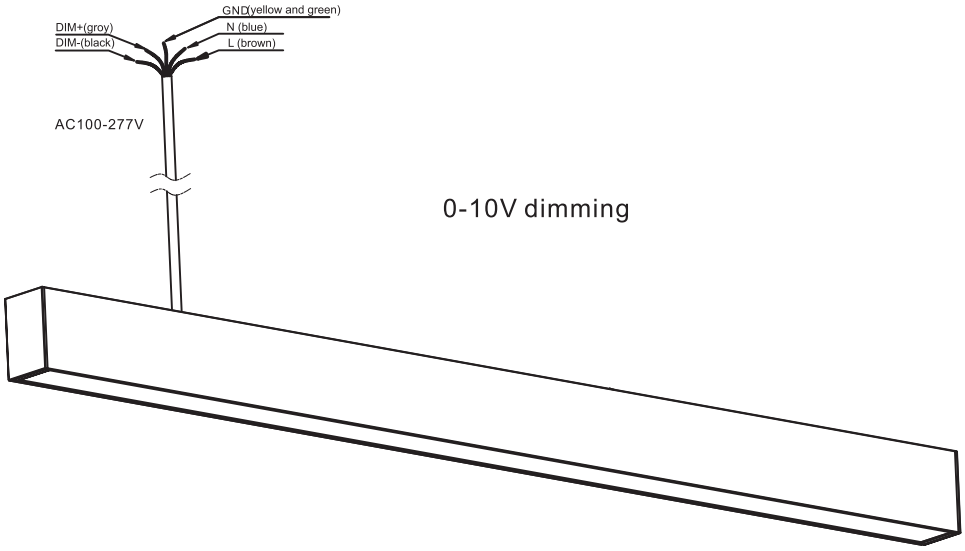

Installation instruction

How to make the first run?

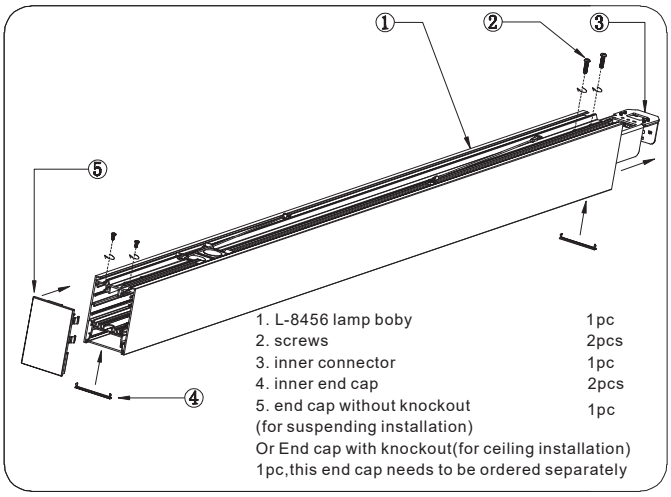

Firstly, loose the 2 screws at the lamp end, and pull out the inner connector from the lamp body, then fix the inner connector by 2 screws again. After finishing the wiring connection(see the steps on the continuous connection),fix the end cap by screws and insert the inner end caps at both sides.

How to make the middle run?

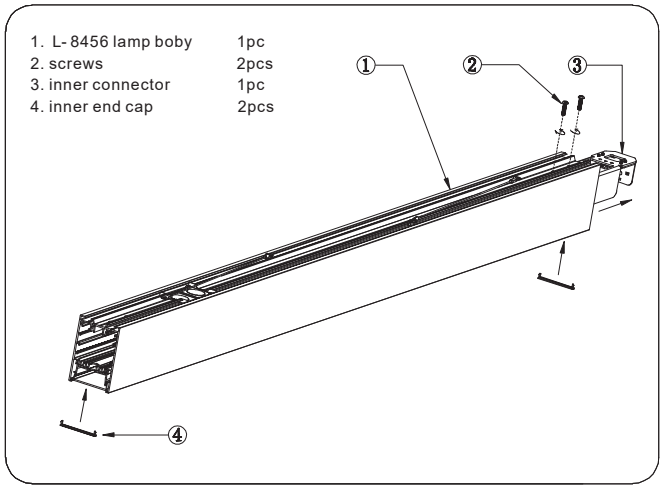

loose the 2 screws at the lamp end, and pull out the inner connector from the lamp body, then fix the inner connector by 2 screws again, insert the inner end caps at both sides.

How to make the last run?

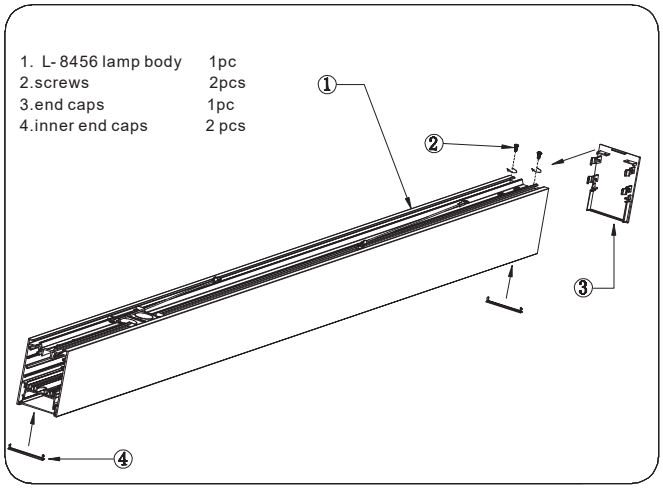

Just fix the end cap at the last end by screws, and insert the two inner end caps.

Suspendent Installation Instructions

Exploded drawing of the first run

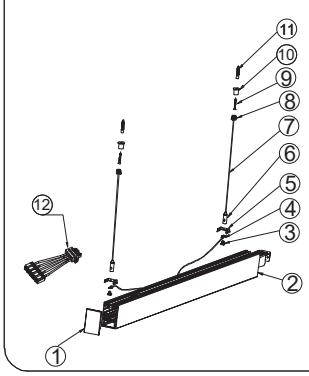

Lamp BOM

1.8456 end cap	1PC
2. 8456 lamp	1PC
3. square head screw	2PCS
4. safety rope	2PCS
5. clamp	2PCS
6. wire lock	2PCS
7. suspendent rope	2PCS
8. fixing head1	2PCS
9. 4X30PA screw	2PCS
10. fixing head2	2PCS
11. rubber plug	2PCS
12. input wire	1PC

Exploded drawing of the middle run

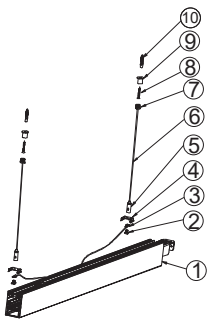

Lamp BOM

1. 8456 lamp	1PC
2. square head screw	2PCS
3. safety rope	2PCS
4. clamp	2PCS
5. wire lock	2PCS
6. suspendent rope	2PCS
7. fixing head1	2PCS
8. 4X30PA screw	2PCS
9. fixing head2	2PCS
10. rubber plug	2PCS

Exploded drawing of the end run

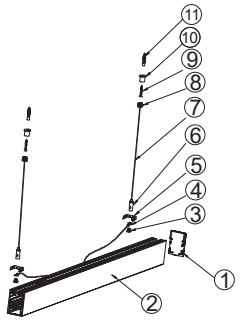

Lamp BOM

1.8456 end cap	1PC
2. 8456 lamp	1PC
3. square head screw	2PCS
4. safety rope	2PCS
5. clamp	2PCS
6. wire lock	2PCS
7. suspendent rope	2PCS
8. fixing head1	2PCS
9. 4X30PA screw	2PCS
10. fixing head2	2PCS
11. rubber plug	2PCS

Installation diagram

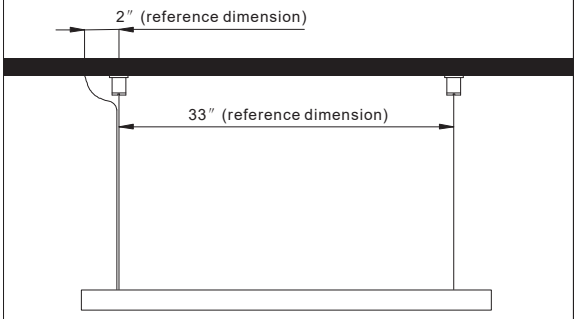

Drill hole

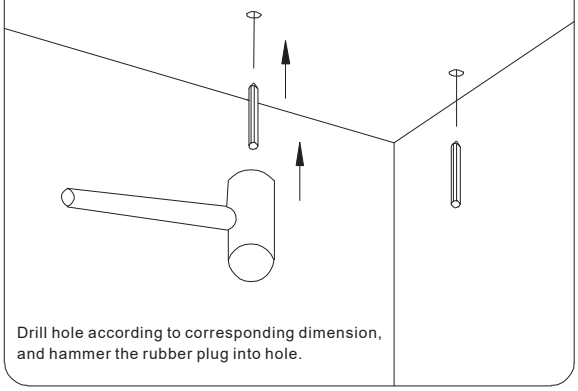

Drill hole according to corresponding dimension, and hammer the rubber plug into hole.

Disassemble pendant rope and fasten fixing head of pendent rope

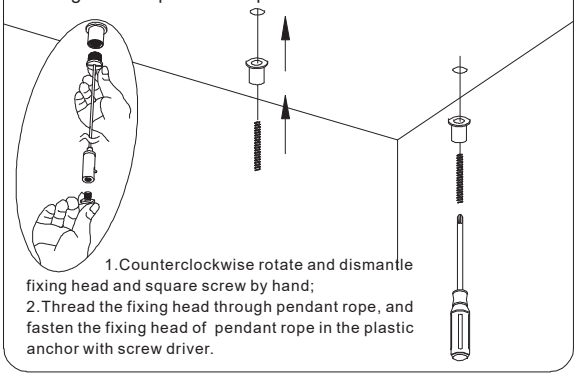

1.Counterclockwise rotate and dismantle fixing head and square screw by hand;
2.Thread the fixing head through pendant rope, and fasten the fixing head of pendant rope in the plastic anchor with screw driver.

Install the first run-disassemble lamp body

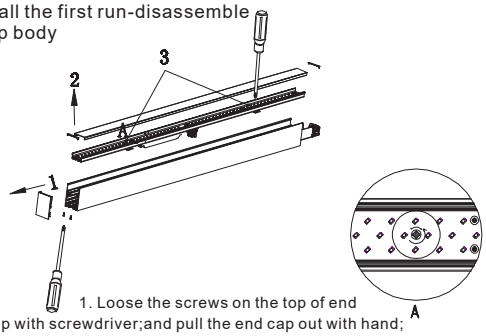

1. Loose the screws on the top of end cap with screwdriver;and pull the end cap out with hand;
2. Dismantle inner side cover and PC cover;
3. Rotate two screws of fixing card counter-clockwise by 90°, and dismantle cooling panel.

Install shell of the first run lamp body

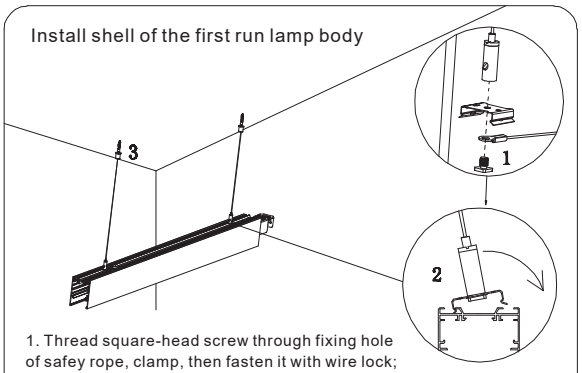

1. Thread square-head screw through fixing hole of safey rope, clamp, then fasten it with wire lock;
2. Snap the clamp into profile slot;
3. Tightening the lamp with fixing head 1 and fixing head 2.

Connect the input cable

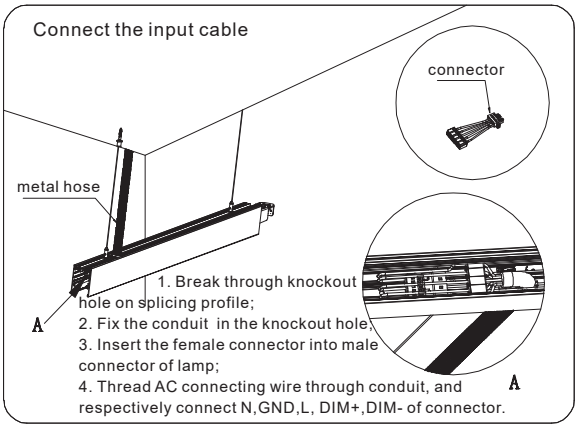

1. Break through knockout hole on splicing profile;
2. Fix the conduit in the knockout hole;
3. Insert the female connector into male connector of lamp;
4. Thread AC connecting wire through conduit, and respectively connect N,GND,L, DIM+,DIM- of connector.

Install the first run lamp body

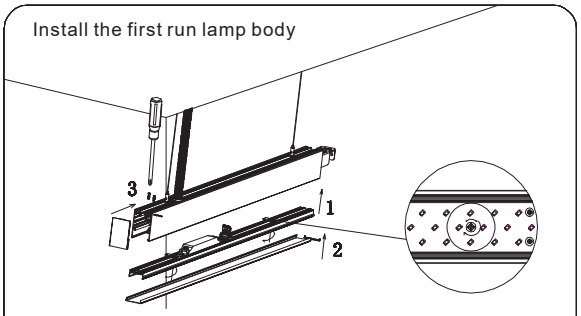

1. Install the cooling panel into shell of lamp body, and rotate screws of fixing card clockwise by 90°;
2. Press and mount the PC cover and inside cover plate on lamp;
3. Clip the end cap on the lamp,and fasten screws on the top of end cap.

Install lamp body of the middle run

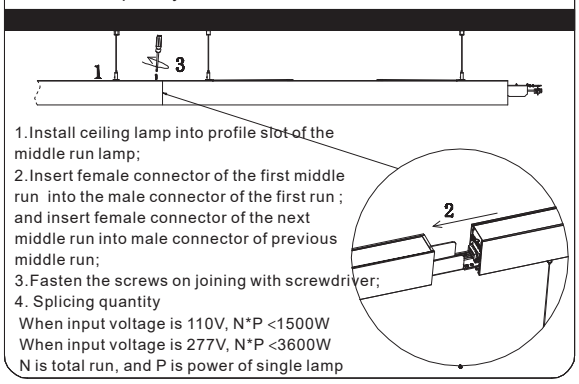

1.Install ceiling lamp into profile slot of the middle run lamp;
2.Insert female connector of the first middle run into the male connector of the first run ; and insert female connector of the next middle run into male connector of previous middle run;
3.Fasten the screws on joining with screwdriver;
4. Splicing quantity
When input voltage is 110V, N*P <1500W
When input voltage is 277V, N*P <3600W
N is total run, and P is power of single lamp

Install lampbody of the end run

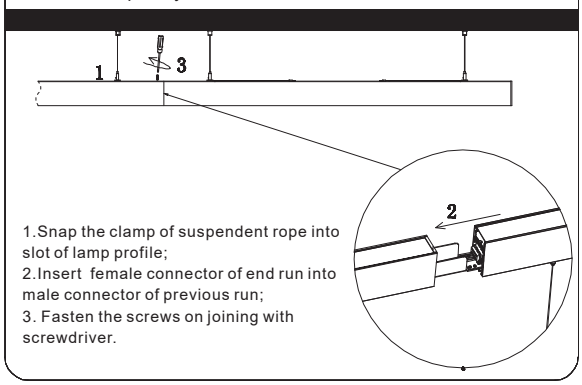

1.Snap the clamp of suspendent rope into slot of lamp profile;
2.Insert female connector of end run into male connector of previous run;
3. Fasten the screws on joining with screwdriver.

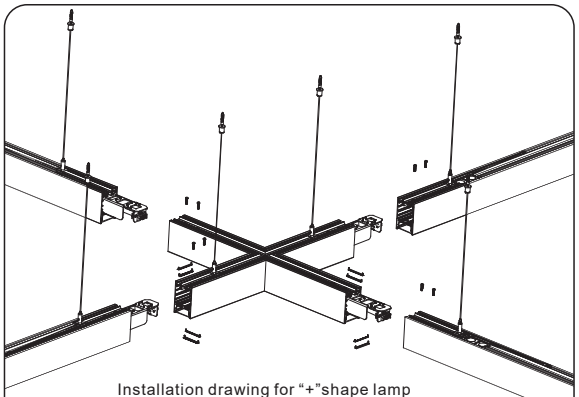

Installation drawing for “+”shape lamp

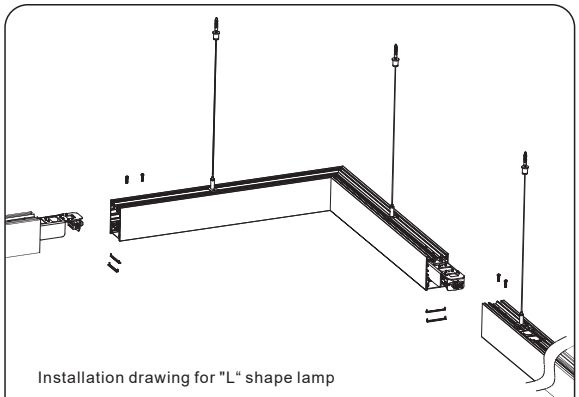

Installation drawing for "L“ shape lamp

Ceiling Installation Instructions

Exploded drawing of the first run

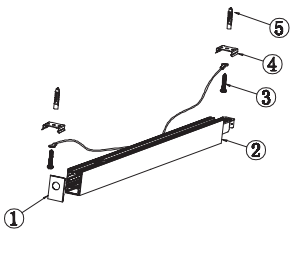

BOM

1. end cap of inlet wire	1pc
2. 8456 lamp	1pc
3. 4*25PA screw	2pcs
4. clamp	2pcs
5. rubber plug	2pcs
6. input wire	1pc

Exploded drawing of the middle run

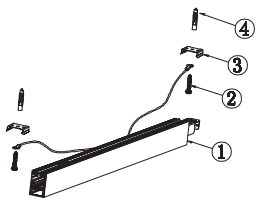

BOM

1.8456 lamp	1pc
2.4*25PA screw	2pcs
3.clamp	2pcs
4.rubber plug	2pcs

Exploded drawing of end run

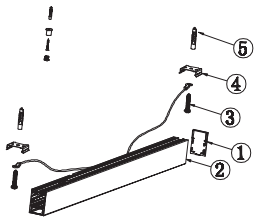

BOM

1. 8456 end cap	1pc
2. 8456 lamp	1pc
3. 4*25PA screw	2pcs
4. clamp	2pcs
5. rubber plug	2pcs

Installation diagram

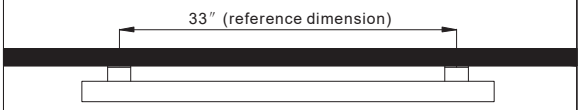

Drill hole

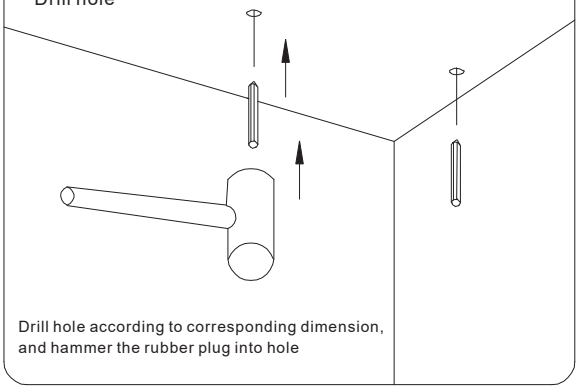

Drill hole according to corresponding dimension, and hammer the rubber plug into hole

Installation of the first run-disassemble lamp body

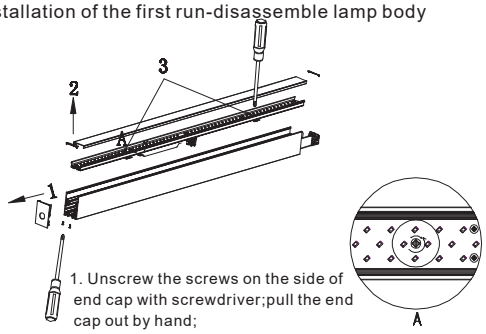

1. Unscrew the screws on the side of end cap with screwdriver;pull the end cap out by hand;
2. Dismantle inner side cover and PC cover;
3. Rotate two screws of fixing card counter-clockwise by 90°, and dismantle cooling panel.

Connect the input cable

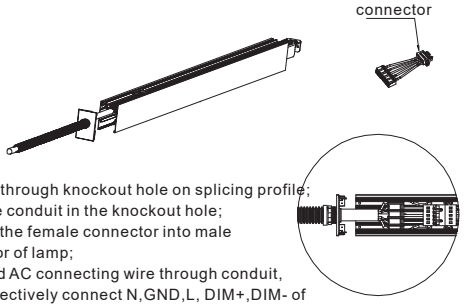

1. Break through knockout hole on splicing profile;
2. Fix the conduit in the knockout hole;
3. Insert the female connector into male connector of lamp;
4. Thread AC connecting wire through conduit, and respectively connect N,GND,L, DIM+,DIM- of connector.nsion, and hammer the rubber plug into hole

Install the first run lamp body

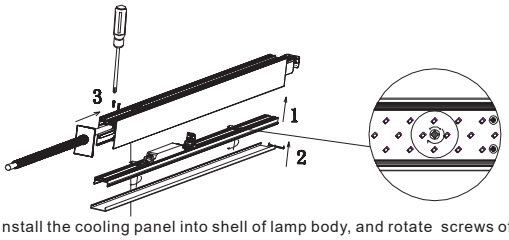

1. Install the cooling panel into shell of lamp body, and rotate screws of fixing card clockwise by 90° to fasten the cooling panel into the lamp;
2. Press and mount the PC cover and inside cover plate on lamp;
3. Clip the end cap on the lamp,and fasten screws on the top of end cap.

Install the clamp of the first run lamp body

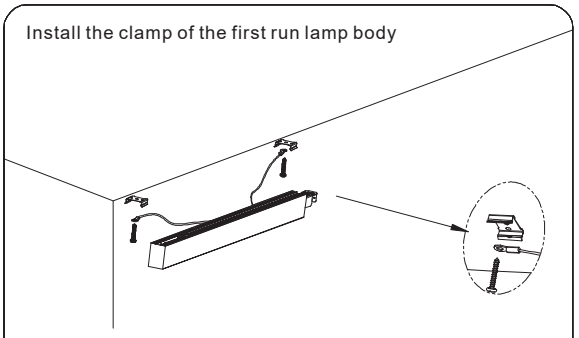

Thread the screw through fixing holes of safety rope and clamp, and fasten the screw with rubber plug in the ceiling

Install the first run lamp body

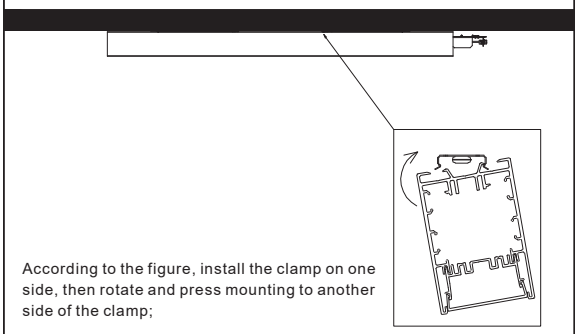

According to the figure, install the clamp on one side, then rotate and press mounting to another side of the clamp;

Install lamp body of the middle run

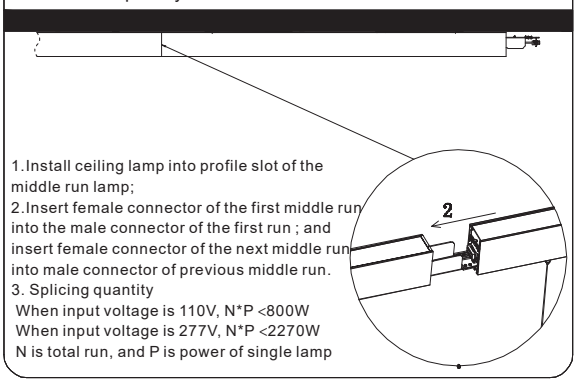

1.Install ceiling lamp into profile slot of the middle run lamp;
2.Insert female connector of the first middle run into the male connector of the first run ; and insert female connector of the next middle run into male connector of previous middle run.
3. Splicing quantity
When input voltage is 110V, N*P <800W
When input voltage is 277V, N*P <2270W
N is total run, and P is power of single lamp

Install lampbody of the end run

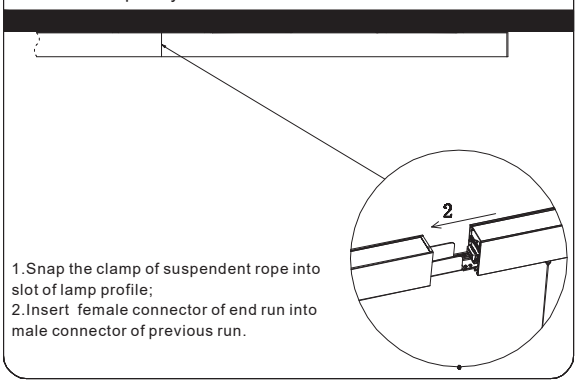

1.Snap the clamp of suspendent rope into slot of lamp profile;
2.Insert female connector of end run into male connector of previous run.

Product packaging information:

1.2m lamp:	2.4m lamp:
◉ net weight/pc:3.24kg ◉ gross weight/CTN:24.8kg ◉ inner size: 1274*130*106mm ◉ carton size: 1288*404*230mm ◉ 1pcs/inner box,6 inner boxes/ carton	◉ net weight/pc:6.5kg ◉ gross weight/CTN:33kg ◉ inner size: 2448*133*106mm ◉ carton size: 2462*413*230mm ◉ 1pcs/inner box,4 inner boxes/ carton
"L" lamp	"+" lamp:
◉ net weight/pc:3.294kg ◉ gross weight/CTN:16.631kg ◉ inner size: 735*105*683mm ◉ carton size: 750*225*701mm ◉ 2pcs/inner box,2 inner boxes/ carton	◉ net weight/pc:3.667kg ◉ gross weight/CTN:9.818kg ◉ inner size: 717.5*717.5*84mm ◉ carton size: 632*105*566mm ◉ 1pcs/inner box,2 inner boxes/ carton

Notice

1. Please read the specification first, to make sure the service environment matches the condition in the specification before using.
2. Please confirm the input voltage, frequency before using.
3.The lamp must be installed by professional personnel
4. If there is any damage on the power line or the shell of the product, it should be taken as defective product and do not use it.;
5. Dangerous high voltage, Non-professionals are not allowed to maintain the products.
6. If the exterior flexible cable or wire is damaged, it must be exchanged by the supplier, its agent or other similar qualified personnel to avoid dangers.