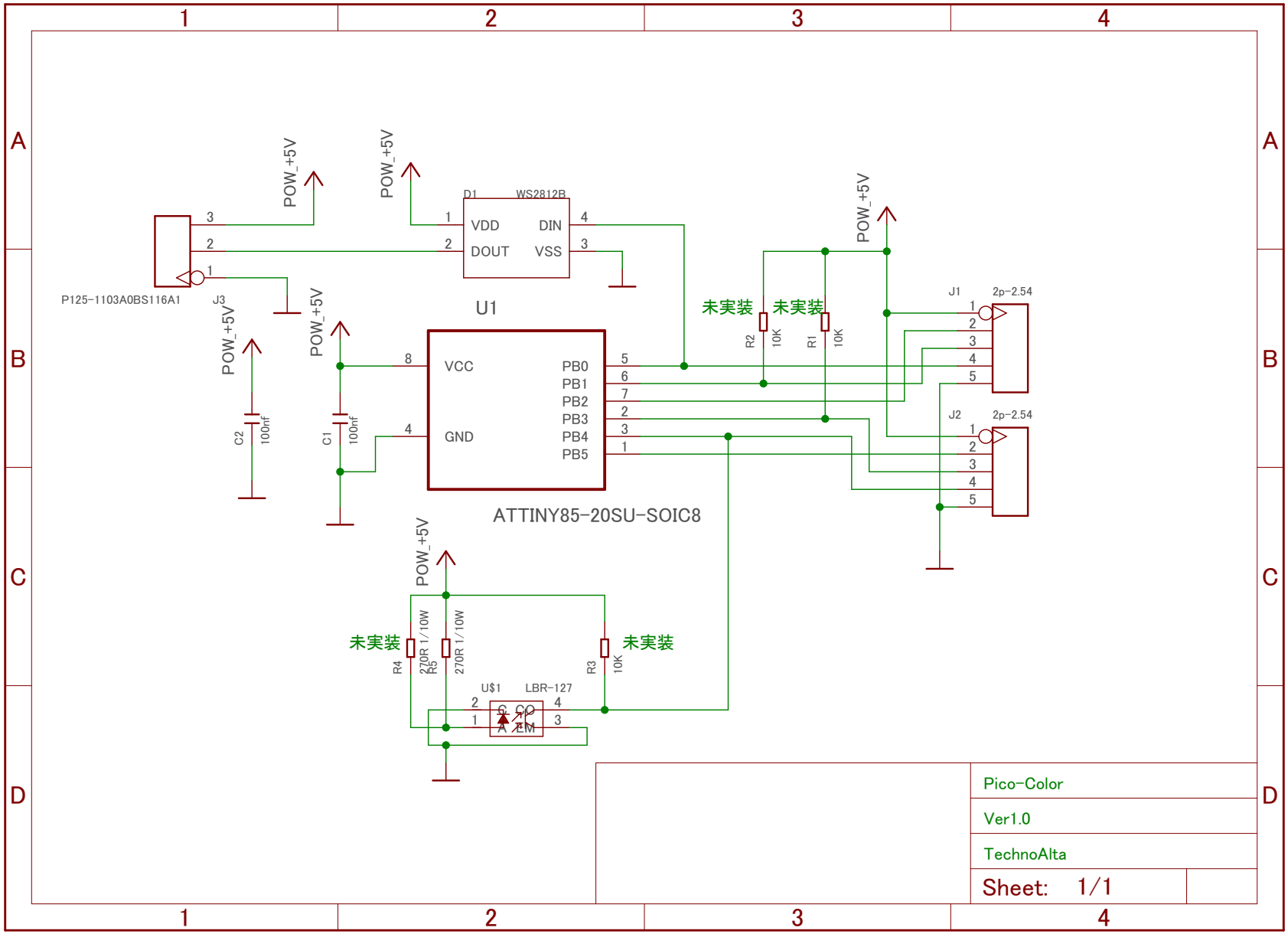

2017/01/11 22:35 f=1.20 C:¥EAGLE-7.7.0¥projects¥examples¥piko_1ST¥piko.sch (Sheet: 1/1)