3D PRINTED FIREARMS:
A history of their creation, distribution and efforts at restriction

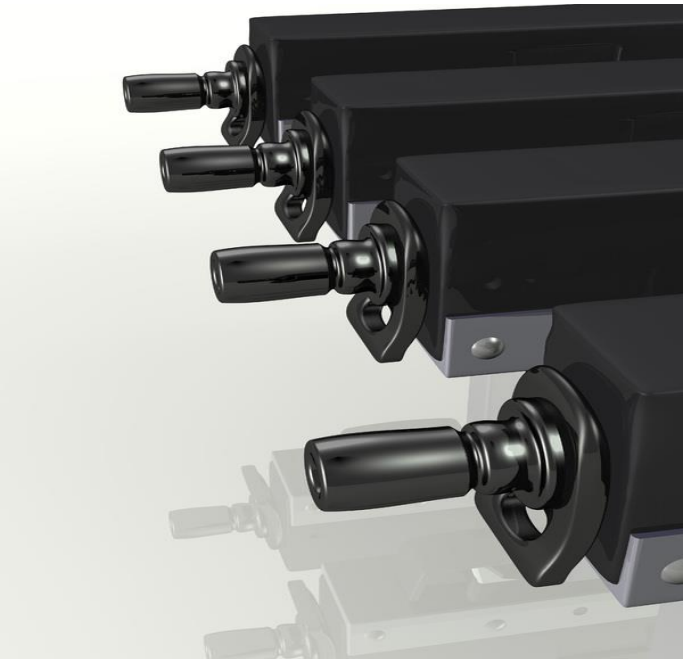

Introduction

2017 marks the 30th anniversary of when the first 3D printer was commercialized by 3D Co Systems[1]. 3D printing has since sparked innovation in the architectural, industrial design and biotechnology industries.[2,3,4] Now, it has developed in areas that were previously thought to be only possible in realms of science fiction, such as the creation of low-cost prosthetic limbs for children in war-torn countries.[5] While other technologies from the same era, such as CDs, have come and gone, 3-D printing has not yet had a significant commercial impact. Despite this protracted delay, the market as a whole is still predicted to reach $40 billion by 2020.[6] The potential for technological innovation and financial gain has attracted international curiosity, firearm enthusiasts and self-proclaimed crypto-anarchists are no exception. The intention of this paper is to broadly outline some of the concerns surrounding 3D printed firearms and to highlight news accounts of these weapons worldwide.

---

[1] https://www.3dsystems.com/our-story
[2] Dan Murphy, "This robot is learning how to print a human organ", 2017, CNBC. Retrieved 14 Aug 2017 from http://www.cnbc.com/2017/06/23/advanced-solutions-develops-first-3d-human-tissue-printer-that-operates-on-six-axis-robot.html
[3] Ryan Whitwam, "Startup aims to make 3D metal printing 100 times faster", 2017, Extreme Tech. Retrieved 14 Aug 2017, from: https://www.extremetech.com/extreme/253260-desktop-metal-3d-metal-printer-100x-faster
[4] Emilie Chalcraft, "In the future we might print not only buildings, but entire urban sections", 2017, Dezeen. Retrieved 14 Aug 2017 from: https://www.dezeen.com/2013/05/21/3d-printing-architecture-print-shift/
[5] Ian Birrell, "3D-printed prosthetic limbs: the next revolution in medicine", 2017, the Guardian. Retrieved 27 July 2017 from https://www.theguardian.com/technology/2017/feb/19/3d-printed-prosthetic-limbs-revolution-in-medicine
[6] ARR Invest, "ARK Disrupt Issue 65: Bitcoin ETF, Deep Learning, 3D Printing, CRISPR", 2017, ARK Investment Management. Retrieved 27 July 2017 from: https://ark-invest.com/research/ark-disrupt-issue-65

Chronology

In 2012, an online open-source organisation called Defense Distributed began 3D printing gun components. By 2013, the organisation successfully fired the world's first 3D printed, single-shot pistol.[7] It was named the *Liberator* after the FP-45 Liberator, a single-shot pistol originally manufactured by the United States military during World War II.[8] The crude polymer design successfully fired live ammunition before falling apart. This was the first step in this area of technology with reproductions and variations popping up across the world. In May 2013, Defense Distributed released a working blueprint for the Liberator handgun.[9] These blueprints were downloaded over 100,000 times worldwide in two days before the US Department of State requested that they be taken down.[10]

In May 2013, a person only known as 'Joe' created the *Lulz Liberator*, at a cost of $25 for materials using a $1,725 3-D printer. From a development standpoint, the creator simply added rifling (spiral grooves inside the rifle to improve accuracy of the weapon) to the original design. The results however, were not shared. In 2013, Solid Concept Inc., a custom manufacturing company based in the United States that is now owned by Stratasys Direct, created the first metal 3D printed handgun. Named the *1911,* this handgun is capable of firing several rounds of ammunition without failure. It was commercially available, but the number of sales has not been disclosed.[11]

Defense Distributed has also developed modular weapons, guns with a core part that can be switched to give the weapons different capabilities. In 2014, Defense Distributed began to publicly sell Computer Numerical Control ("CNC") milling machines named *Ghost Gunners*. US gun laws regulate the sale of the lower receivers by marking them with serial numbers on the firearm, as well as imposing background checks and waiting periods on those seeking to buy them. These CNC milling machines can grind particular parts of a legally-obtained inactive lower receiver to turn it into a functional component of a semi-automatic AR-15 rifle. The remaining parts of an AR-15 rifle can be legally and easily obtained in the United States. These firearms are known as *Ghost Guns* because they are untraceable.[12]

Concerns surrounding 3D guns

i. **Undetectable** – The plastic composition of handguns, such as the *Liberator,* means that these firearms do not trigger metal detectors. The firing pins are usually the only metal part of the gun, which can be too small to be detected. British journalists put this to the test in 2013 by successfully negotiating the Eurostar train security checkpoints between London and Paris whilst carrying a printed 3D printed pistol, albeit without a firing pin or bullets.[13] A step further was taken by Israeli TV journalists who succeeded in taking a functioning 3D printed pistol through security systems and into the Knesset, Israel's parliament building, again however this was done without bullets.[14]

ii. **Accessible** – The Computer Aided Design files or rather the blueprints for the Liberator were downloaded of 100,000 times and are now available on file sharing sites for worldwide access. This has been demonstrated by the media reports of several cases of print and possession in countries like Finland,[15] Japan[16] and the UK[17]. The costs

---

[7] Andrew Zaleski, "CODY WILSON WANTS TO DESTROY YOUR WORLD", 2015, Wired, Retrieved 28 July 2017 from https://www.wired.com/2015/03/cody-wilson-wants-to-destroy-your-world/

[8] Andy Greenberg, "3D-Printed Gun's Blueprints Downloaded 100,000 Times In Two Days (With Some Help From Kim Dotcom)", 2017, the Guardian. Retrieved on 28 July 2017 from: https://www.forbes.com/sites/andygreenberg/2013/05/08/3d-printed-guns-blueprints-downloaded-100000-times-in-two-days-with-some-help-from-kim-dotcom/#4ada84e910b8

[9] *Ibid*

[10] Adam Popescu, "Cody Wilson: the man who wants Americans to print their own 3D guns", 2017, the Guardian. Retrieved 28 July 2017 from https://www.theguardian.com/us-news/2016/jun/06/cody-wilson-3d-guns-printing-firearms-lower-receivers

[11] Sebastian Anthony, "The $25 Lulz Liberator: The first 3D-printed gun with a rifled barrel", 2013, Extreme Tech. Retrieved 14 Aug 2017 from: http://www.extremetech.com/extreme/156304-the-25-lulz-liberator-the-first-3d-printed-gun-with-a-rifled-barrel

[12] Andy Greenberg, "I Made an Untraceable AR-15 'Ghost Gun' in My Office—and It Was Easy", 2015, Wired. Retrieved 14 Aug 2017 from: https://www.wired.com/2015/06/i-made-an-untraceable-ar-15-ghost-gun/

[13] Simon Murphy, "How Mail On Sunday 'printed' first plastic gun in UK using a 3D printer- and then took it on board Eurostar without being stopped in security scandal", 2013, Retrieved 14 August 2017 from http://www.dailymail.co.uk/news/article-2323158/How-Mail-On-Sunday-printed-plastic-gun-UK--took-board-Eurostar-stopped-security-scandal.html#ixzz4sNv28DvO

[14] Haaretz, "Israeli TV Program Sneaks 3-D Printed Pistol Into Knesset Without Being Detected", 2013, Haaretz. Retrieved 14 Aug 2017 from http://www.haaretz.com/israel-news/.premium-1.533753

[15] Jyrki Richt, "'Liberator' 3D-printed handgun fails after single shot in Finnish test", 2013, YLE. Retrieved 14 Aug 2017 from https://yle.fi/uutiset/3-6643536

of printers and materials have already dropped from when the Liberator and Lulz Liberator were created. Bearing in mind that a 3D printer has been now created from scrap hardware in Togo[18], it is clear that the cost and expertise required for production will drop, which in turn is likely to make 3D firearms more readily available.

iii. **Untraceable** – 3D printers can manufacture firearms with cast markings to indicate the manufacturer name, country and logo. However, this method does not provide unique serial numbers to differentiate between one 3-D firearm and another.[19] Traditional methods of identifying steel weapons, such as *Stamping* and *Laser Marking* can be more easily erased on 3-D printed firearms. Furthermore, these weapons can be melted down, leaving virtually no trace.

iv. **Fragile** – 3D firearms are still considered to be in the adolescent stage of development. They are composed of ABS, an inexpensive plastic commonly used for parts in the automobile industry. The weak nature of the plastic could result in the firearms exploding unpredictably and the disintegration of the weapon.[20] A single shot nevertheless can be fatal. There are no standards in manufacturing so 3-D firearms can be dangerous to the owners as well as to others**.**

National Measures Discussion

Following the publication of the *Liberator's* blueprints, a number of countries took pre-emptive and cautionary measures to restrict 3D printed guns including Australia,[21] Singapore,[22,23] Denmark,[24] Thailand[25] and USA.[26,27,28] Not surprisingly, the United States, a country that has notoriously fierce opposition to gun control, has been slow to implement tough measures. In 2013, the Senate amended the Undetectable Firearms Act to restrict the possession or manufacture of guns that cannot be detected by metal detectors or X-ray machines. Adversaries of the bill point out the obvious flaw that people could print guns with detachable metal parts.[29] The United States has failed to take effective national action in addressing the manufacturing of guns using 3D printers. Only a few state and local governments have taken any steps toward regulation. In 2013, in a pre-emptive measure, Philadelphia became the first US city to ban owning or making 3-D printed guns. New York, Washington DC, and California have all attempted and failed to pass legislation banning the manufacturing or ownership of 3D printed guns[30]. In California, one has to register a 3D gun.[31] The United Kingdom has taken a stronger approach by implementing strict regulations. In 2013, it passed

---

[16] Brian Krassenstein, "Two Year Sentence Handed Down to Yoshitomo Imura in Japanese 3D Printed Gun Case", 2014, 3D Print. Retrieved 14 Aug 2017, from: https://3dprint.com/20019/sentence-imura-3d-printed-gun/

[17] Simon Murphy, "How Mail On Sunday 'printed' first plastic gun in UK using a 3D printer- and then took it on board Eurostar without being stopped in security scandal", 2013, Retrieved 14 Aug 2017, from: http://www.dailymail.co.uk/news/article-2323158/How-Mail-On-Sunday-printed-plastic-gun-UK--took-board-Eurostar-stopped-security-scandal.html

[18] Rowan Moore Gerety, "A 3-D printer made from trash: Togo's answer to the developed world's e-waste", 2013, Medium. Retrieved 14 Aug 2017 from https://medium.com/african-makers/a-3-d-printer-made-from-trash-togos-answer-to-the-developed-worlds-e-waste-1a9c664da5a

[19] "Homemade Guns: Are They Legal? Must They Be Registered?" *www.criminaldefenselawyer.com*. N.p., n.d. Web. 28 July 2017. http://www.easybib.com/cite/view#

[20] Charles Arthur, "3D-printed guns: expert warns of threat to user" 2017, The Guardian. Retrieved 28 July 2017 from https://www.theguardian.com/technology/2013/may/09/3d-printed-guns-user

[21] Bridget Butler Millsaps, "New South Wales, Australia: Parliament Passes Law Banning Possession of 3D Files for Guns", 2015, 3D Print. Retrieved 14 Aug 2017 from: https://3dprint.com/106940/australia-ban-3d-files-guns/

[22] Alec, "Using 3D printed guns in Singapore punishable by death, LGBT controversy reveals", 2016, 3ders. Retrieved 14 Aug 2017 from: http://www.3ders.org/articles/20160627-using-3d-printed-guns-in-singapore-punishable-by-death-lgbt-controversy-reveals.html

[23] https://3dprinterchat.com/2017/03/illegal-3d-file/

[24] John Biggs, "Danish Company Creates Software That Will Stop You From Printing A Gun", 2013, Tech Crunch. Retrieved 14 Aug 2017 from: https://techcrunch.com/2013/06/26/danish-company-creates-software-that-will-stop-you-from-printing-a-gun/

[25] Alec, "Thai government approves crippling import regulations on 3D printers due to gun fears", 2016, 3ders. Retrieved 14 Aug 2017 from http://www.3ders.org/articles/20160316-thai-government-approves-crippling-import-regulations-on-3d-printers-due-to-gun-fears.html

[26] Katie Armstrong, "California passes new 3D printed gun laws", 2016, 3D Printing Industry. Retrieved 14 Aug 2017 from https://3dprintingindustry.com/news/california-passes-new-3d-printed-gun-laws-90177/

[27] https://3dprinterchat.com/2017/03/illegal-3d-file/

[28] *Forbes*. Forbes Magazine, n.d. Web. 28 July 2017.

[29]http://www.nbcnews.com/news/other/senate-extends-ban-undetectable-guns-nixes-tighter-restrictions-f2D11717122

[30] Alexis Kleinman "Philadelphia Is The First U.S. City To Ban 3D-Printed Guns." The Huffington Post. TheHuffingtonPost.com, 26 Nov. 2013. Web. 28 July 2017.

[31] https://www.pcmag.com/news/346460/california-to-require-registration-of-3d-printed-guns

legislation prohibiting the sale, possession and manufacture of 3D printed guns, with a maximum punishment of 10 years in prison.[32] In Japan, a country with strict anti-firearm policies, a man was arrested and sentenced to two years in federal prison after he posted videos on You Tube of a 3-D firearm test-firing blank cartridges.[33]

Australia, a country that saw major gun law reforms in 1996,[34] has taken advanced steps in addressing the 3D gun issue. In 2013, the New South Wales Police created a 3D printed gun at a cost of $35 for materials using a $1700 printer using files downloaded from the Internet.[35] As a result of the experiment, Australia has taken a firm stance against using 3D printers to manufacture guns. In 2015, the New South Wales Parliament approved the Firearms and Weapons Prohibition Legislation Amendment Bill which states that *"a person must not possess a digital blueprint for the manufacture of a firearm on a 3D printer or on an electronic milling machine,"*[36] an offence punishable by a maximum penalty of 14 years in prison.

A more robust approach was taken by Thailand in February 2016, when its Government approved legislation stipulating that all imported 3-D printing machines should be registered. Registration would also apply when ownership of the machine was transferred.[37] Critics believe this move will drive up the price of the machines and hamstring development in the industry.[38] Significant regulation and restriction on the use of consumer 3D printing machines could help to control the production, possession, and use of 3D firearms. Nevertheless, there is a significant risk that 3D printing will widen the economic gap between developing and developed countries in this fast moving technology.

In the private sector, Danish company, Create It Real has developed smart 3D printer software that analyses the characteristics of the intended product, using their own database of firearm characteristics. If there is a match the 3D printer will not print the part. Whilst this is an intelligent way to tackle the problem, it is simply a failsafe to prevent children accidentally printing a firearm at home.[39] In addition, there are means of bypassing the software and of modifying parts of the firearm to avoid detection, in addition to the software being expensive.[40]

United Nations Discussions

The Chair's Summary at the Second Meeting of Governmental Experts MGE2 held by the United Nations Office of Disarmament Affairs (UNODA) noted that new technologies such as laser marking and micro-stamping, in conjunction with traditional marking methods, could help to uniquely identify these firearms and neutralize the threats they pose. [41] However, it concluded that the lack of affordable and available machines for producing reliable firearms gives some time for policy solutions.[42] China put forward suggestions that resembled the proposed restrictive national legislation in Thailand. 3-D printing was further discussed during the Sixth Biennial Meeting of States on the Programme of Action (BMS6) in July 2016. The resulting report indicated that 'States [should] undertake to apply the commitments of the International Tracing Instrument to all small arms and light weapons, regardless of the methods of manufacture, including three-dimensional printing'.

---

[32] http://www.reuters.com/article/us-britain-guns-idUSBRE9B40OV20131205
[33] http://www.telegraph.co.uk/technology/news/11187481/Japanese-man-becomes-first-person-to-be-jailed-for-making-gun-with-3D-printer.html
[34] Melissa Davey, https://www.theguardian.com/world/2016/jun/23/australias-gun-laws-stopped-mass-shootings-and-reduced-homicides-study-finds, 2016, The Guardian. Retrieved 14 Aug 2017.
[35] http://www.huffingtonpost.com.au/2015/11/20/3d-printed-gun-laws-nsw_n_8595818.html
[36] http://www.legislation.nsw.gov.au/bills/5bb4f02b-1f1e-48b2-aa93-955574e699f6
[37] "Regulation Hits 3D Printers."Http://www.bangkokpost.com. N.p., n.d. Web. 28 July 2017.
[38] *Ibid.*
[39] John Biggs, "Danish Company Creates Software That Will Stop You From Printing A Gun", 2013, Tech Crunch. Retrieved 14 Aug 2017 from https://techcrunch.com/2013/06/26/danish-company-creates-software-that-will-stop-you-from-printing-a-gun
[40] Michael Molitch-Hou, "Create it REAL Stops 3DP GUns becoming Real", 2013, 3D Printing Industry. Retrieved 14 August 2017 from https://3dprintingindustry.com/news/create-it-real-stops-3dp-guns-from-becoming-real-13765/
[41] https://s3.amazonaws.com/unoda-web/wp-content/uploads/2015/03/2015-06-17-Chairs_Summary-MGE2.pdf
[42] United Nations Office for Disarmament Affairs (UNODA), Chair's Summary: Programme of Action on Small Arms and Light Weapons Second Open-ended Meeting of Governmental Experts 2015, Retrieved 27 July 2017 from https://s3.amazonaws.com/unoda-web/wp-content/uploads/2015/03/2015-06-17-Chairs_Summary-MGE2.pdf

Conclusion

The methods to curb alone are unlikely to prevent the production and possession of 3D printed firearms. Criminals can remove ITI-compliant markings,[43] therefore the examples of how 3D guns have come to the attention of the police at national level are either through blatant public use, as was the case of a YouTube video in Japan, or through unrelated police investigations as occurred in the United States in May 2015[44] or Australia in 2016.[45] Not only can the markings on 3D firearms be removed but the polymer can more easily be destroyed entirely, leaving no trace at all. [46] Furthermore, the cost of laser marking is relatively high and could subject developing countries to higher hurdles than developed countries trying to implement international instruments.[47] 3D printing technology can benefit developing countries through the production of medical appliance components, prosthetic limbs and housing projects. Significantly restricting or preventing civilian access to 3D printing technology should not be the only solution.

Developments in 3D firearm printing will continue, in the meantime there are three recommendations to consider:

1. There should be a communal approach in favour of criminalising the production, possession and use of 3D firearms. Legislation should go further, as it has done in Australia, to criminalise the action of downloading 3D firearm blueprints.

2. Member States should open national discussion about finding software based solutions to the prevention of printing 3D firearms, as demonstrated by Create It Real in Denmark.

3. Industry experts need to be involved in sharing information, educating Member States and the public, and also developing means of physically tagging and tracing 3-D firearms.

Examples of AR-15 Lower 3D printing (a different process of 3D printing):
All of an AR-15 rifle can be bought legally in the US except for the lower receiver. One can now buy a lower receiver which requires *milling*. By milling the lower receiver, the owner can avoid background security checks, waiting times, and tracing. The process differs from that of printing a 'Liberator' handgun, but interesting nonetheless. Here are a few examples of these weapons appearing worldwide:

- https://3dprint.com/62597/ca-deputies-raid-3d-print-gun/
- http://www.3ders.org/articles/20160526-australian-mongol-bikie-arrested-after-3d-printer-and-firearm-equipment-found-at-home.html
- http://www.businessinsider.com/legal-loophole-allowed-john-zawahri-to-obtain-a-gun-2013-6

This paper was prepared for IANSA and NonViolence International by Gwilym Roberts Harry.

Funding provided by:
UNSCAR
United Nations Trust Facility
Supporting Cooperation on Arms Regulation

iansa
international action network on small arms

T: +1-703-474-4520
777 United Nations Plaza, Suite 3E
New York, NY 10017
United States
www.iansa.org

[43] https://s3.amazonaws.com/unoda-web/wp-content/uploads/2015/03/2015-06-17-Chairs_Summary-MGE2.pdf
[44] http://www.policechiefmagazine.org/3d-printing-new-kinds-of-crime/
[45] https://www.gizmodo.com.au/2016/11/how-real-is-the-risk-of-3d-printed-guns-in-australia/
[46] Gerald Walther, "Printing Insecurity? The Security Implications of 3D Printing of Weapons", 2014. https://www.ncbi.nlm.nih.gov/pmc/articles/PMC4656707/
[47] https://spie.org/membership/spie-professional-magazine/sustainable-lasers-in-africa