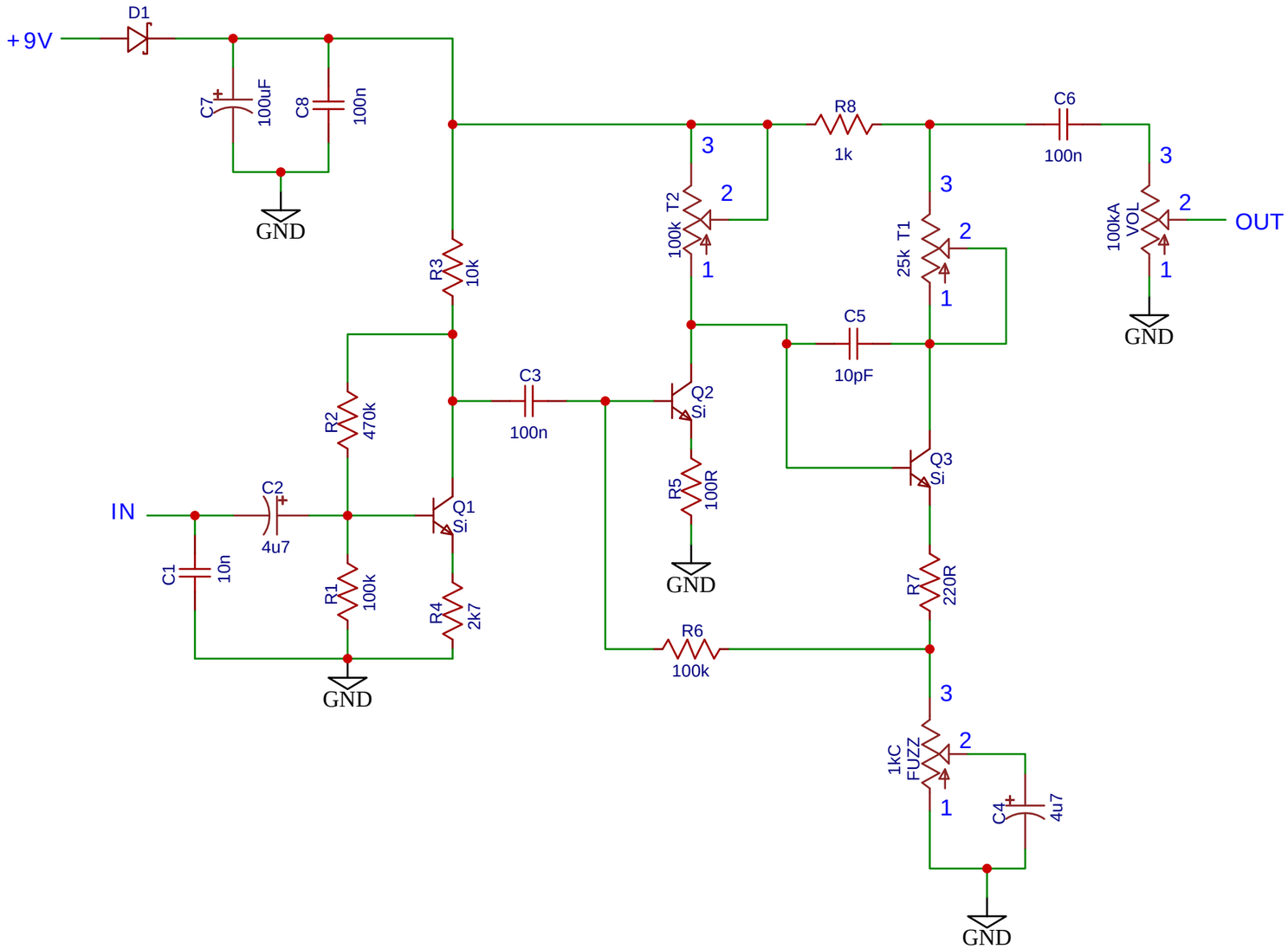

TITLE: Tone Bender Kit		REV: 1.0
EasyEDA	Company: Jeds Peds	Sheet: 1/1
	Date: 2019-07-24 Drawn By: a	