www.Jedspeds.co.uk

Jacquie's Octave PCB Kit

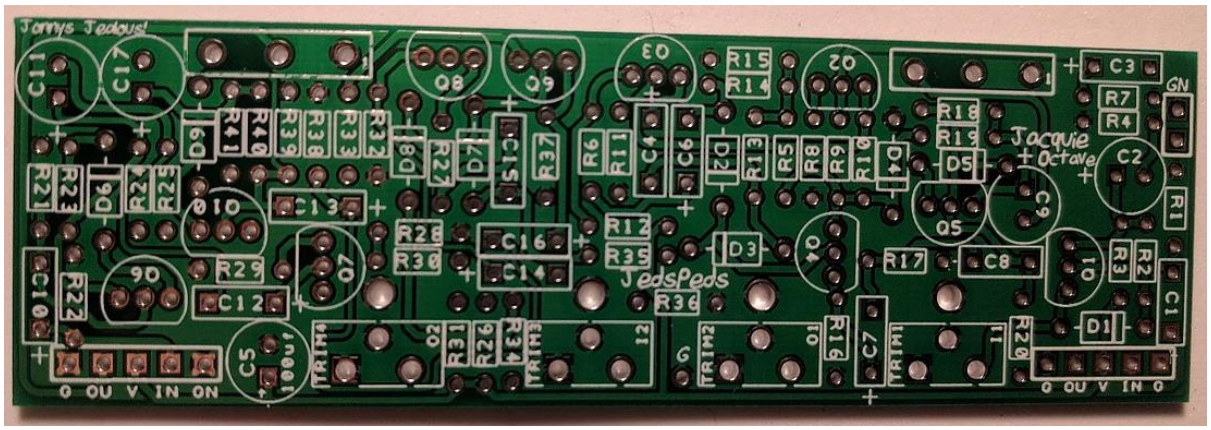

Please read the guide in full before starting your build. If it is blatantly obvious you haven't read it and contact us for help then don't be surprised if we tell you to read the guide again… harsh I know.

Parts List

R1	10M	**R16**	10k	**R31**	18k	**C1**	100n	**C16**	100n
R2	10M	**R17**	47k	**R32**	10k	**C2**	10uf	**C17**	10uf
R3	5k1	**R18**	10m	**R33**	10k	**C3**	47n	**Q1, 5, 6, 10**	BS170
R4	100k	**R19**	5k1	**R34**	68k	**C4**	47N	**Q2, 4, 7, 9**	5088
R5	22k	**R20**	10m	**R35**	68k	**C5**	100u	**Q3, 8**	2n3906
R6	10k	**R21**	10m	**R36**	22k	**C6**	47N	**D1, 5, 6, 9**	Zener 9v1
R7	150k	**R22**	1m	**R37**	47k	**C7**	100N	**D2, 3, 7, 8**	1n34a
R8	6K2	**R23**	10m	**R38**	1m	**C8**	100n	**D4**	4001
R9	560k	**R24**	5k1	**R39**	10m	**C9**	10uf	**Pot 1, 2.**	100ka
R10	18K	**R25**	100k	**R40**	10m	**C10**	100nf	**T1 - 4**	5k
R11	10K	**R26**	22k	**R41**	5k1	**C11**	10uf		
R12	10K	**R27**	10k			**C12**	47n		
R13	68K	**R28**	150k			**C13**	100nf		
R14	68K	**R29**	6k2			**C14**	47n		
R15	22k	**R30**	560k			**C15**	47n		

Kit Specific Build Notes

- This is a work a like kit of the Jonny Octave, however the actual circuitry in use here is different. This circuit consists of 4 SHO Crackles and 2 Green Ringers to generate the octaves.
- There are 4 trimmers, which are used to set the gain of the boost sections before and after the octave. You must play about with these, they change the tone of the pedal massively. Its fairly versatile, for a dirty ish octave clangy thingy.
- In case you hadn't noticed there are tonnes of parts, but the mechanics are quite simple, it goes Sho – GR – Sho. Twice.

Schematics for Reference (please ignore part numbering)

Sho Sections

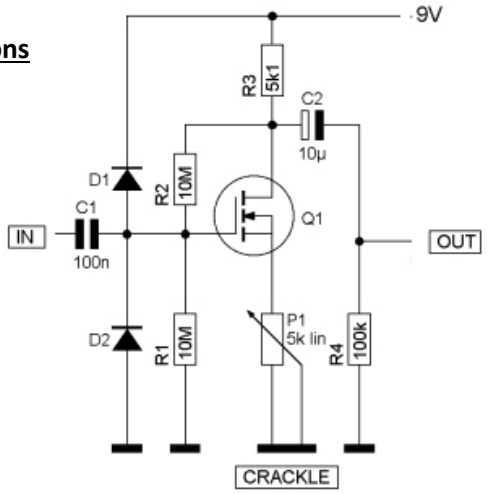

Ringer Sections.

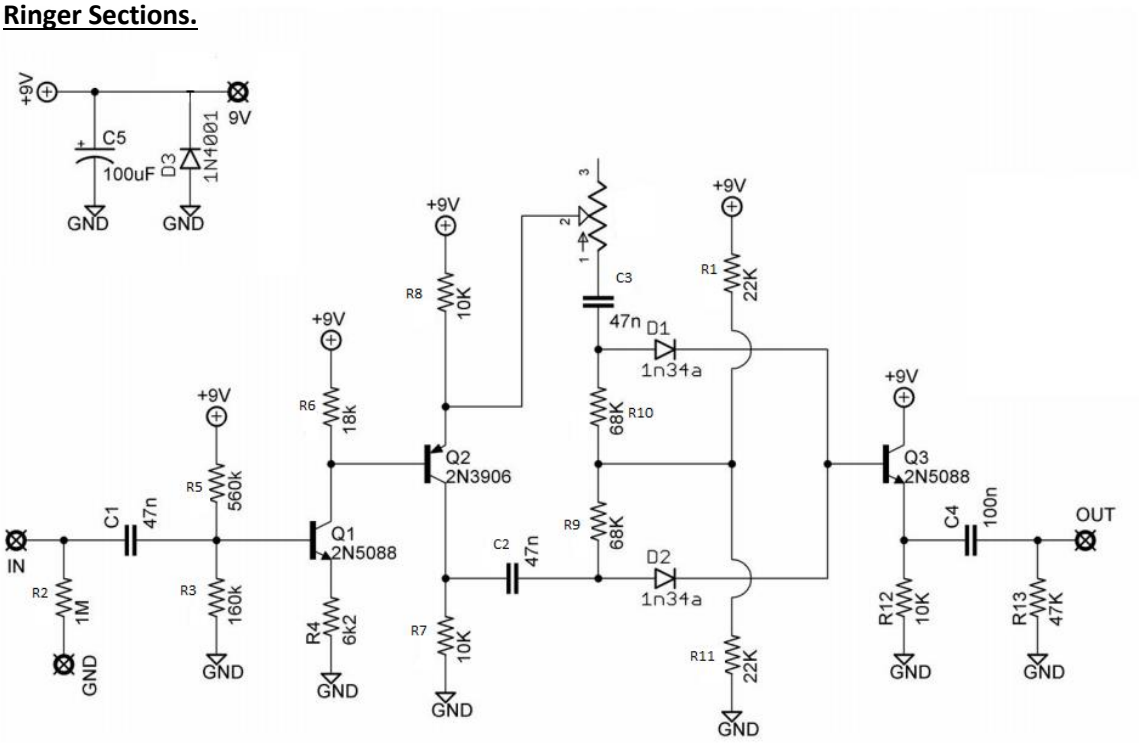

General Build Instruction

The first thing you must do is identify your parts from the pack. As a rule, I build from small to big – therefore step one will be to identify the resistors and any diodes inside your kit.

Each kit has a parts list at the top of the guide. So as an example, if R1 is listed as a 1M resistor then you dig out a 1M from the pack and place it on the PCB in the R1 spot. It's your call if you put one in and solder or put a few in or even put them all in and solder. I'll let you decide.

The front of the PCB is the side with the white writing on (the silkscreen)

You then need to follow the same process for all the other parts included. Working in height order mount the rest of the parts to the PCB ensuring that you solder them in place well as you go.

Some parts are quite heat sensitive so you must be careful when soldering them. Diodes, chips and transistors mainly. They can easily burn out by overheating.

I would then add the offboard wires, starting with nice long ones leaving them to be trimmed to length later. Finally, I add the pots either mounting them to the board or wiring them into place.

Useful links
Resistor calculator

Pots

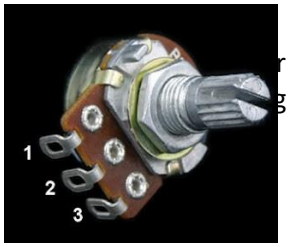

r the pots. Snap the little metal tag
g to put it through the holes in the

Some of our PCBs are now designed to use right angled mount pcb potentiometers. They mount from the rear as indicated by the pcb. We will provide right angled pots as stocked, this means that you may receive a "normal" pot on occasion and you will have to wire it. It's not that inconvenient now is it.

The other options for pots are that they are wired into place or the PCB hangs from them.

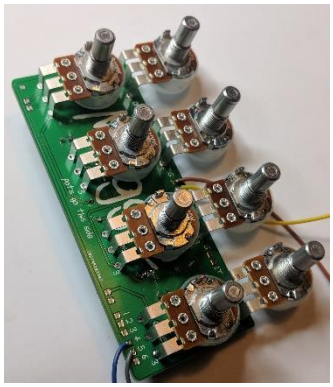

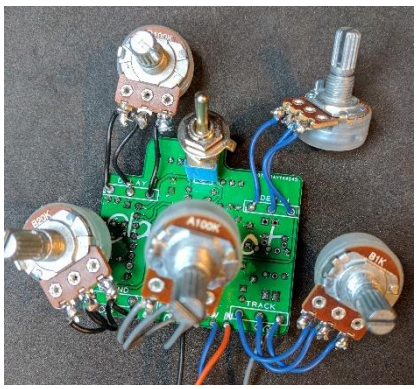

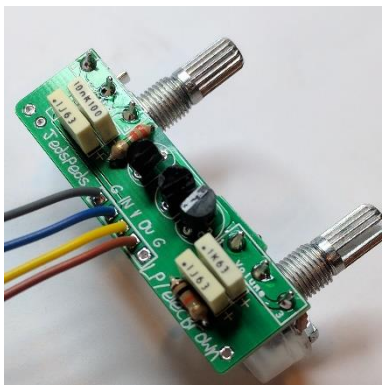

Hooking up the Jacks

Our kits come with mono jacks. They have two connections, a positive or the tip connection. And a negative, or sleeve connection.

The tip connections will connect to the 3PDT as shown later in the guide unless there are instructions otherwise.

The sleeve connections are ground points, all grounds throughout a build must connect. The Jack socket will then connect to the enclosure and ground the case.

Power Socket

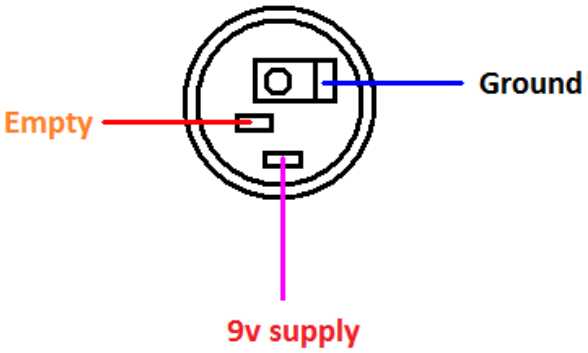

TEST THE BOARD

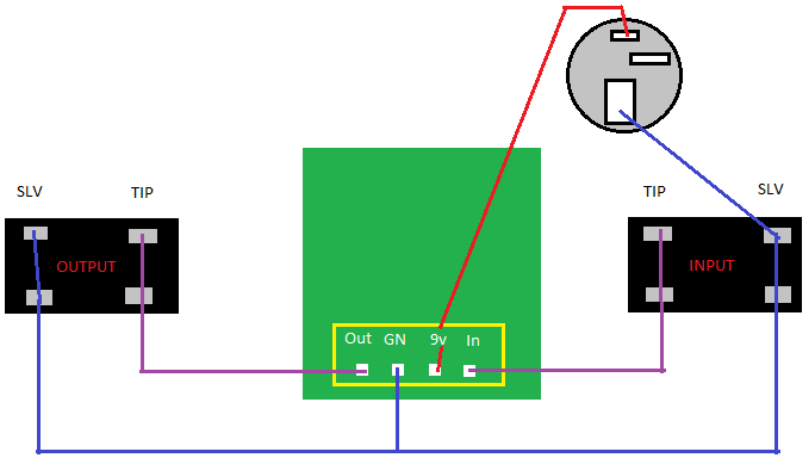

When you get to the stage with the board and pots wired you need to test the board before you add the foot switch. Firstly, don't put it in the box – I see people building inside a tiny enclosure and I wonder why. Some PCB's are tight enough as it is without reducing your workspace to 6cm wide!

Connect Input pad to TIP of Input jack. Same with output. Then connect the power to the 9v pad. Connect all grounds together (board, jack sleeves and 9v) If your board is working at this point then you can start work on the switch! If not…get double checking! If you email asking me why your pedal

isn't working the first thing I will ask is… "did it work without the switch?", so make sure you follow this step.

If your PCB is working you are ready to connect the board to the footswitch! Follow the next stages meticulously and all being well by the end of it you will have a lovely finished pedal!

The next step involves undoing the tip wires from the PCB as they will now move to the 3PDT.

If its not working at this stage then you need to find out why. Do not continue beyond this point until you get it working. Adding a footswitch will not magically make a circuit work.

Troubleshooting is a necessary evil at times.

The Footswitch.

Have a look at the footswitch. It has 9 pins. The orientation of the switch is crucial. If you do it wrong your switch will not work, you might ruin it and you will certainly have to un do it.

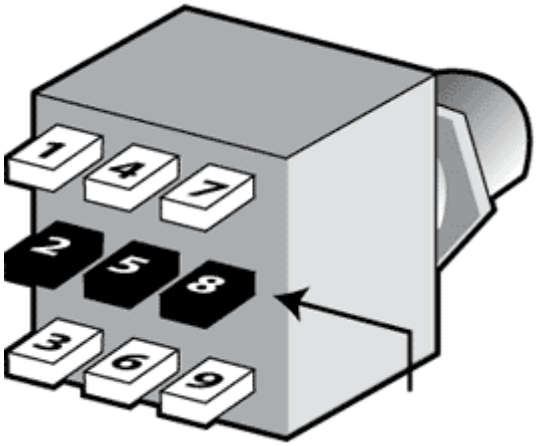

The pins on the switch must run left to right like this, so the top row of pins would be 1, 4, and 7.

If you put it in with 1, 2, and 3 across the top row you are wrong.

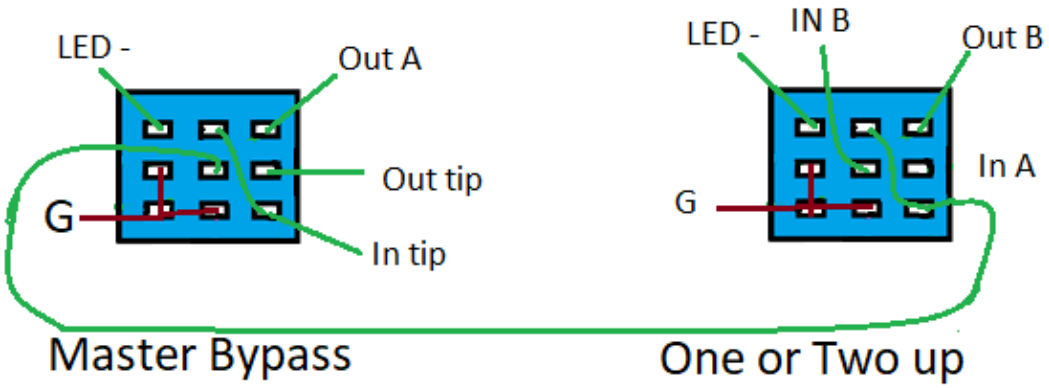

It does not matter which side of the PCB you use as A, or B. both sides are identical to one another. The LEDs need a resistor between the power source and heir long leg. There will be spares in the kit upto a value of 4k7.

Good luck and happy soldering!

PCB Design Notes

1. All PCBs are designed by ourselves, and tested before sale.
2. Box caps are shown with a + polarity mark on the silk screen, this is irrelevant as the box caps are non-polarised so can go either way.
3. Spare ground points may be provided on the PCB layout, use them if you wish but there is no requirement to.