BRIDGE CRANES

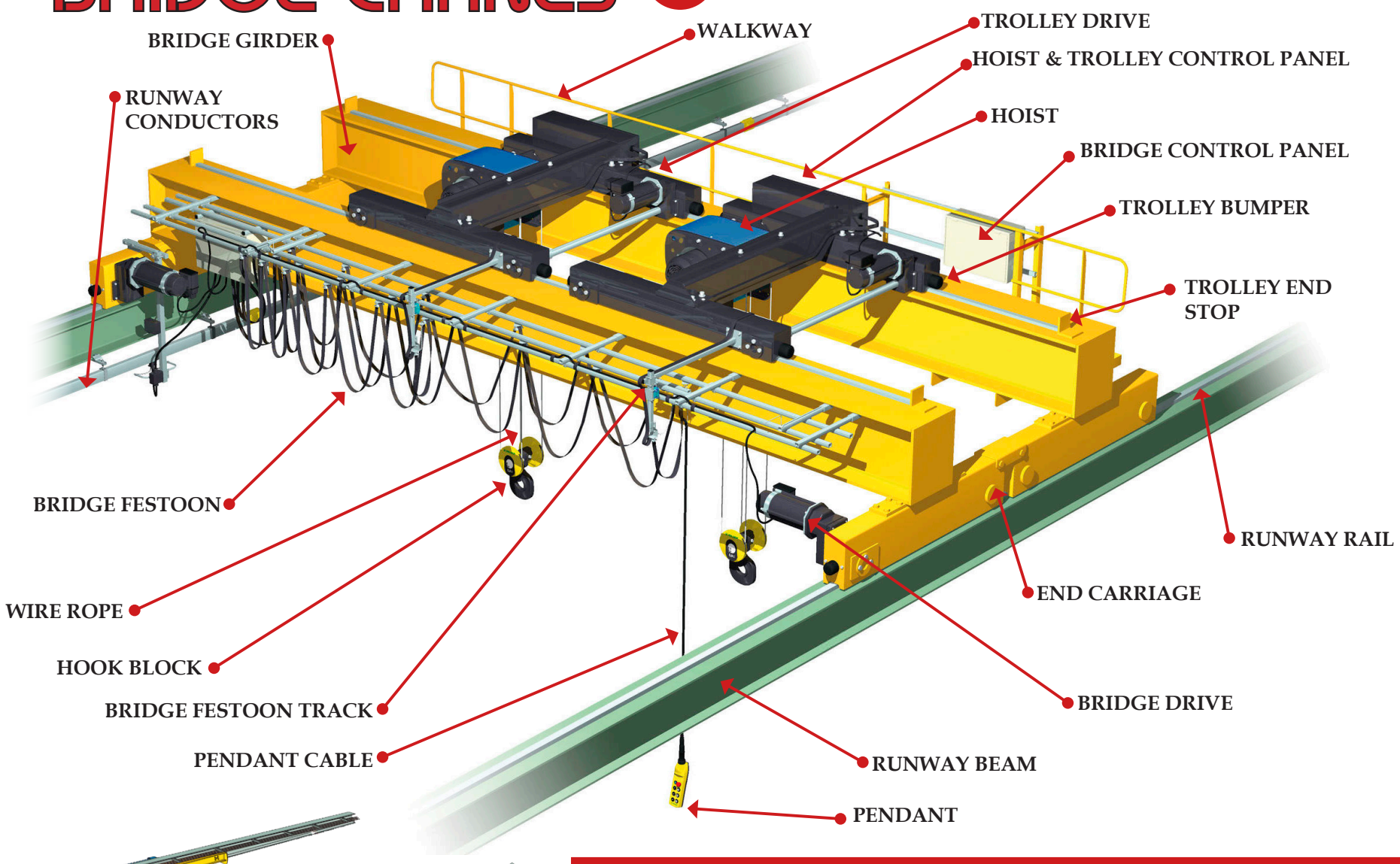

OVERHEAD CRANES 101

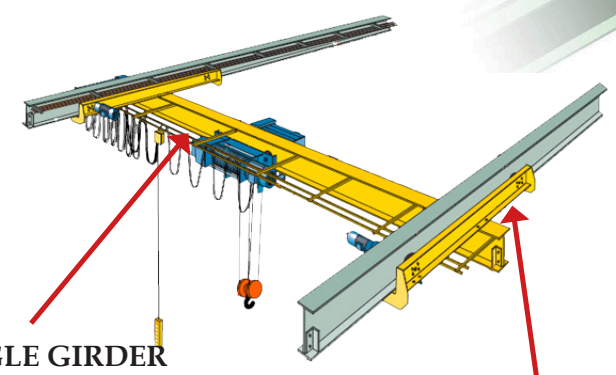

SINGLE GIRDER
or
DOUBLE GIRDER

GIRDER TYPES

UNDER RUNNING
or
TOP RUNNING

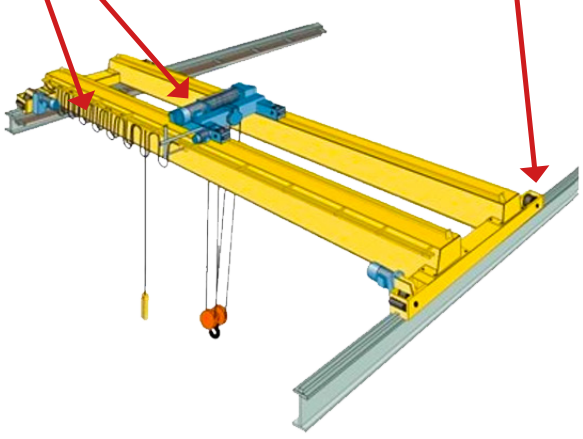

WORKSTATION CRANE

Loads can be ergonomically moved along the bridge to any point within the rectangle formed by the two runways

JIB CRANE

A horizontal member (jib or boom), supporting a moveable hoist, is fixed to a wall or to a floor mounted pillar

GANTRY CRANE

A bridge for carrying the trolley(s) is rigidly supported on two or more legs usually with wheels allowing the whole crane to traverse

KRISTIAN ELECTRIC LTD

www.kristian.ca