C Prox Ltd (inc Quantek)

Unit 11 Callywhite Business Park, Callywhite Lane, Dronfield, S18 2XP

+44(0)1246 417113 sales@cproxltd.com www.quantek.co.uk

Disabled Toilet Locking System

With "Steritouch" antimicrobial protection

Auto Door system:

Overview: Swing Door: the system is designed to leave the door unlocked enabling manual or assisted entry, when entering the facility, the door should be shut before the "Touch to Lock" sensor will work therefore inhibiting pranksters. This is achieved by a normally closed door status micro-switch.

Hence simply enter the facility, operate the internal sensor, the door will lock, Red lamps denoting Engaged/Locked, operate again and the door will unlock and open automatically. Blue lamps denote Vacant/Open.

When incorporating a sliding door, the additional activate timer PCB can be adjusted to keep the door open on entry until the "Touch to Lock" sensor is activated to ensure the user engages the lock.

A link on the PCB enables flashing or solid status LEDs.

An access control system may be fitted to give a secure door scenario.

Non-Auto Door system:

A simple latching touch sensor with Engaged / Vacant panel.

When entering the facility, the door must be shut before the "Touch to Lock" sensor will work therefore inhibiting pranksters.

Auto door sensors may be added to this system if an upgrade is required.

Touch sensor installation:

Architrave & Round (AWC - RWC).
Use back plate to mark cable hole & screw fixing points.
Fix top retaining screw (No 8 or 10) leave 4 mm of screw shaft protruding.
Fit back seal to rear of plate (if being used externally).
Place cable through Back-plate & seal.
Make connections (see circuit).
Fit back-plate to unit.
Hook unit onto top screw & fit bottom retaining screw.

Single gang (SGWC)
Internal quality only
Fits any UK metal or plastic back-box. Surface or flush.
(If using a metal back box the vertical lugs may require removal).
Attach back box to wall, place cable through and make connections (see circuit).
Attach plate to box using the two 3.5mm bolts supplied.
If label is supplied unattached, ensure the system is fully functioning before de-powering the system, removing the yellow adhesive backing and carefully attaching the labels, then powering up the system again.

Square (SQWC)
Remove signage plate by unscrewing the two security screws with driver provided.
Use box to mark to mark four fixing points.
Use 20mm knockout and place cable through.
Attach box to wall with 4 x No8 screws.
Make connections (see circuit) LED connections from WCPCB go into LED panel terminals.
Place plate back into box and insert the two security screws.
Ensure the system is fully functioning before de-powering the system, removing the yellow adhesive backing and carefully attaching the labels, then powering up the system again.

Door contact:
Closed circuit when door closed. If not using anti-prank, link terminals.
Note: When using door sense magnetic contacts (CP280DS).
Use white (common) and orange wires (closed when door shut).

When installing a sliding door:
Place link across **door contact** unless you have "Door Closed / Locked" clean contact monitoring. Adjust the activate timer to approximately 30 seconds, thus keeping the door open, coercing the user to operate the "Touch to Lock" sensor whereon the door will close immediately, therefore reducing the risk of the user not setting to engaged before using the facility.

Square sensors SQWCLOCK/SQWCASSK:
The LED wires (+V, red, blue) go to the outer LED circuit board, rather than the small touch sensor circuit board.

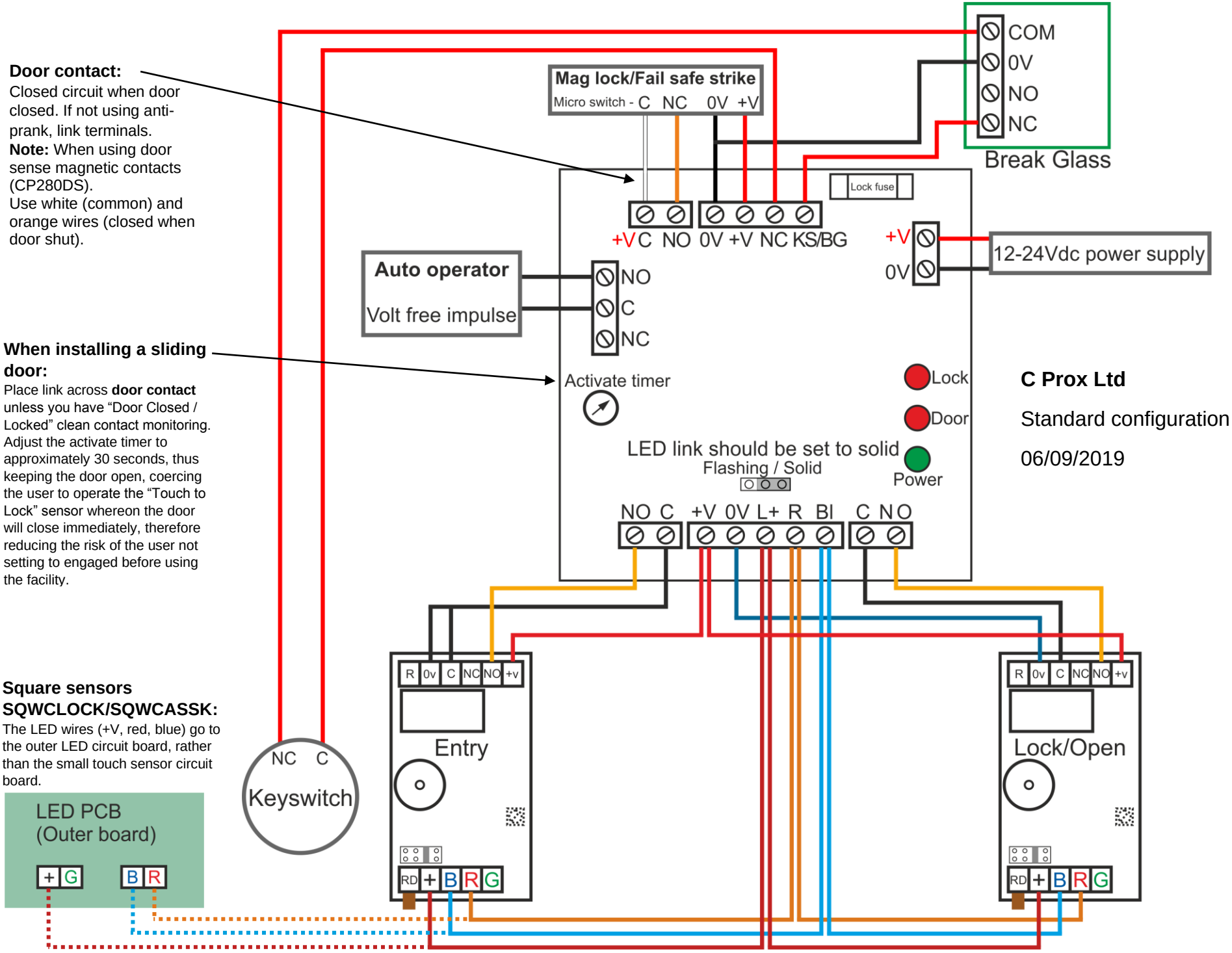

C Prox Ltd

Standard configuration

06/09/2019