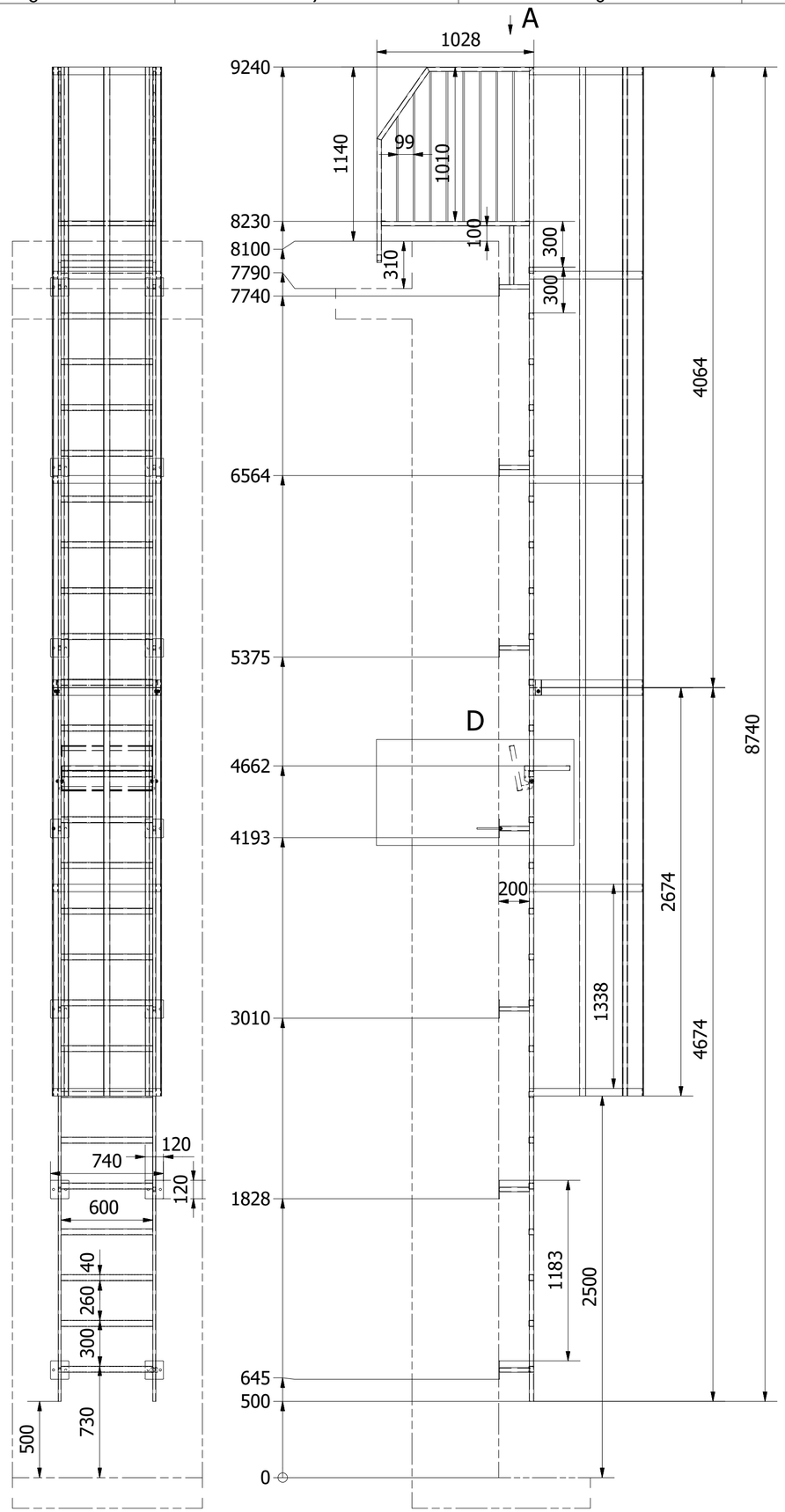

C (1 : 10)

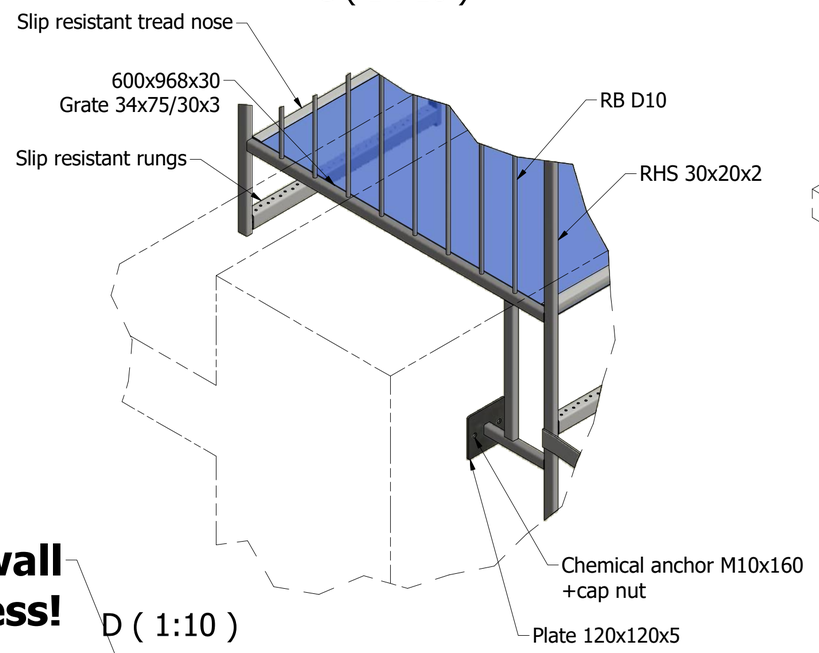

Check wall thickness!

D (1:10)

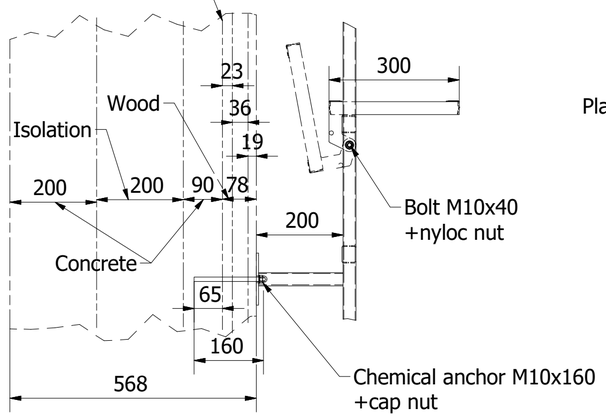

E (1:6)

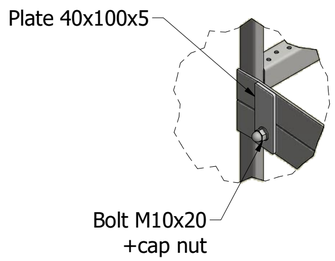

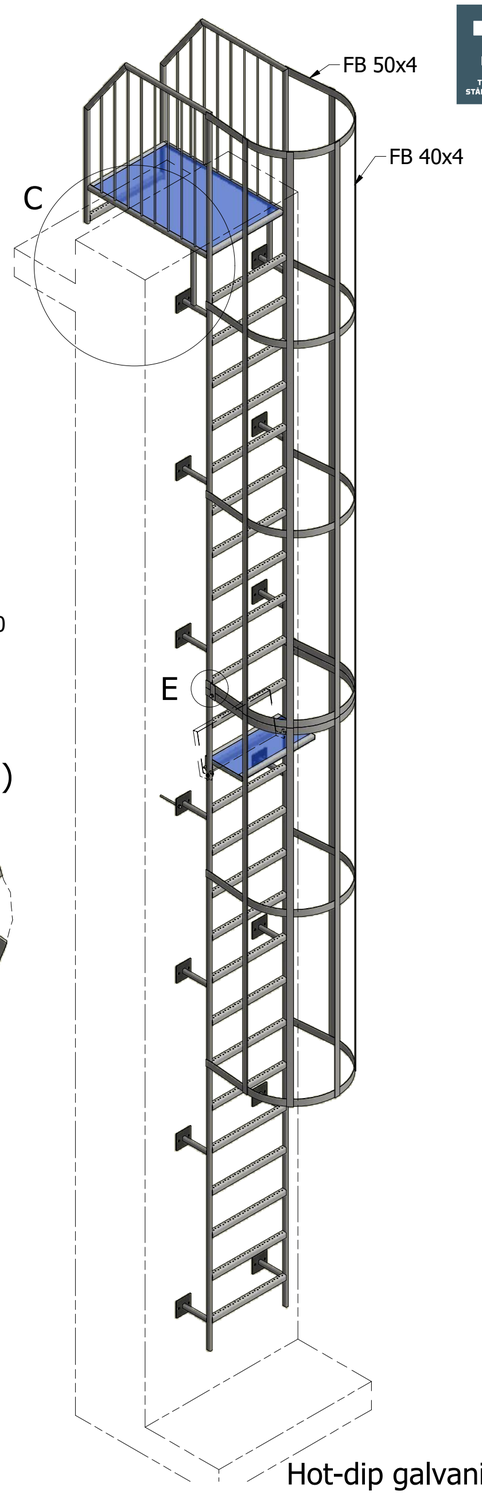

A (1 : 15)

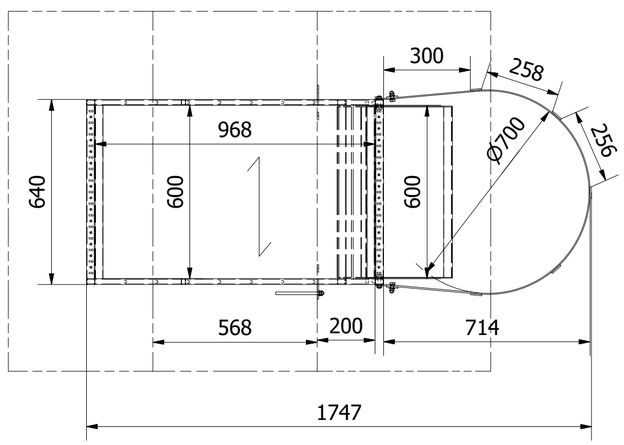

Hot-dip galvanized

ITEM	QTY	PART NR.	PROFILE	STOCK NR.	LENGTH	MASS
2	1	N-TROM122-8-1105	Foldable step			7
1	1	N-TROM122-8-1101	Ladder (in 2 parts)			178

PARTS LIST

Created by:	Date:	Total quantity:	Material:	Mass:	Surface color:	Paper size:
Peeter	08.02.2022	1 pcs	S235J2	184 kg	KZN	A2

TROMSØ STÅLINDUSTRI
Phone +47 932 18900
firmapost@tromso-stalindustri.no

Title:	Scale:	Sheet:
Ladder	1 : 25	1 / 1
Part number: N-TROM122-8-1001		Revision: A