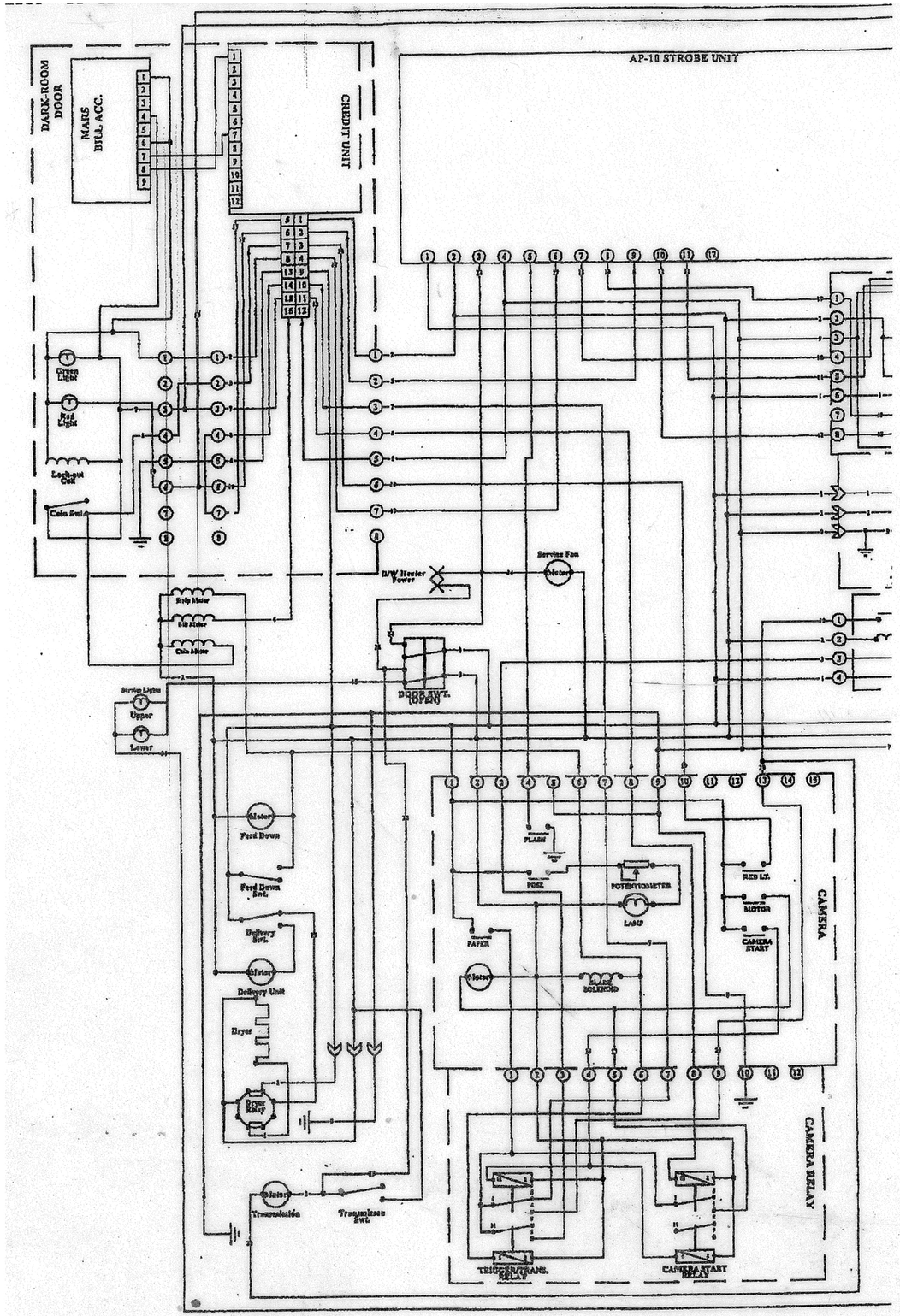


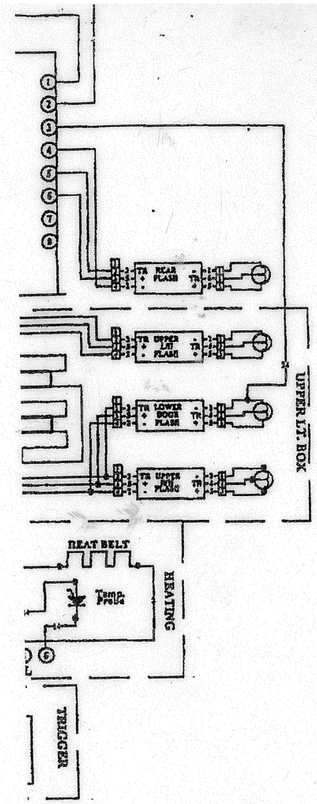


# PHOTO-ME,USA

1123 W.N CARRIER PKWY
GRAND PRAIRIE, TX 75050
(972) 606-1940

| | |
|---|---|
| TITLE | M-21 STUDIO WIRE DIAGRAM |
| NAME: ROCKOWSKI | DATE: 01/03/02 |
| REV. | SCALE: NONE |

| HARNESS LISTING | |
|---|---|
| DESCRIPTION | P/N |
| MAIN HARNESS | 2650.0000 |
| DOOR HARNESS | 2651.0000 |
| CREDIT UNIT HNS. | 18804.0000 |
| MARS HARNESS | 18003.1100 |
| DRYER HARNESS | 2651.0000 |
| TEMP. CONTROL HNS. | 15171.0000 |
| DARK ROOM HNS. | 15365.0000 |
| LOWER FLASH HNS. | 15265.0000 |
| SHORT FLASH HNS. | 15259.0000 |
| LIGHT BOX HNS. | 2569.0000 |
| CAMERA HARNESS | 2858.0000 |
| REAR FLASH HNS. | 15265.0000 |
| | |
| | |
| | |
| | |
| | |

| WIRE COLOR CODES | | |
|---|---|---|
| | Main Color | Tracing |
| 1 | Black | - |
| 2 | White | - |
| 3 | Purple | - |
| 4 | Yellow | - |
| 5 | Red | - |
| 6 | Blue | - |
| 7 | Yellow | Red |
| 8 | Purple | White |
| 9 | Green | - |
| 10 | Yellow | Green |
| 11 | Purple | Green |
| 12 | Yellow | Black |
| 13 | Red | White |
| 14 | Red | Black |
| 15 | Orange | Black |
| 16 | - | - |
| 17 | Blue | Black |
| 18 | Blue | White |
| 19 | Blue | Red |
| 20 | White | Black |
| 21 | White | Red |
| 22 | - | - |
| 23 | - | - |
| 24 | White | Green |
| 25 | Black | White |
| 26 | Black | Red |
| 27 | Yellow | White |
| 28 | Grey | - |
| 29 | - | - |
| 30 | - | - |
| 31 | Grey | Green |
| | | |