HAYMASTER

DIECI HAYMASTER SERIES III TELEHANDLER 4T / 7 M

40.7

DIECI TELEHANDLERS

PERFORMANCE

Machine model	HAYMASTER 40.7
Maximum capacity	4000 kg (8818 lb)
Maximum lifting height on wheels	7.06 m (23.2 ft)
Maximum horizontal extension on wheels	3.90 m (12.8 ft)
Fork swiveling angle	146°
Pull-out force	6000 daN (13489 lbf)
Towing force	8200 daN (18434 lbf)
Maximum climb angle	60%
Unladen weight	7700 kg (16976 lb)
Max speed (referred to wheels with maximum permitted diameter)	40 km/h (24.9 mph)

BOOM

Machine model	HAYMASTER 40.7
Lifting	6.6 s
Getting off the basket	3.9 s
Extension	5.5 s
Retraction	3.3 s
Forward swiveling	2.1 s
Reverse swiveling	1.3 s

ENGINE

Machine model	HAYMASTER 40.7
Brand	FPT
Nominal power	93 kW (125 HP)
@rpm	2200 rpm
Operation	4-stroke
Injection	Mechanical direct
Number and arrangement of cylinders	4, Vertical in line
Displacement	4485 cm^3 (274 in^3)
Consumption	230 g/kWh (378.35 lb/Hp h)
@rpm	2200 rpm
Emission standards	Stage IIIA/Tier 3
Cooling system	Liquid
Intake	Turbo compressor after-cooler

DIFFERENTIAL AXLES

Machine model	HAYMASTER 40.7
Axles types	2 steering, with 4 planetary reduction gears
Type of steering	4 wheels / transversal / 2 wheels
Front axle	Rigid
Rear axle	Swinging
Service brake	Oil bath with servo brake on front and rear axle with double hydraulic system
Park brake	Automatic spring applied hydraulic release

HYDRAULIC SYSTEM

Machine model	HAYMASTER 40.7
Hydraulic pump type	Gear pump for power steering and movements
Hydraulic pump capacity	180 L/min (47.6 gal/min)
Max. operating pressure	25.0 MPa (3626 psi)
Distributor control	4in1 proportional Joystick

REFUELING

Machine model	HAYMASTER 40.7
Hydraulic motor (total)	160.0 L (42.27 gal)
Diesel tank	180.0 L (47.55 gal)

TRANSMISSION

Machine model	HAYMASTER 40.7
Transmission type	Torque converter with Power Shift EVO 2 reversing mechanism and electric control
Inching	With electronic pedal for controlled forward movement
Transmission gearbox	6 forward gears / 3 reverse gears with electronic control

TYRES

Machine model	HAYMASTER 40.7
Standard tyres	460/70R24”

DIMENSIONS

Machine model	HAYMASTER 40.7
A	360 mm (14.2in)
B	1475 mm (58.1 in)
C	2750 mm (108.3 in)
D	850 mm (33.5 in)
F	4175 mm (164.4 in)
G	5075 mm (199.8 in)
H	2445 mm (96.3 in)
I	940 mm (37 in)
L	1820 mm (71.7 in)
M	2260 mm (89 in)
O	5185 mm (204.1 in)
P	1320 mm (154.3 in)
Q	3920 mm (154.3 in)
T	200 mm (7.9 in)

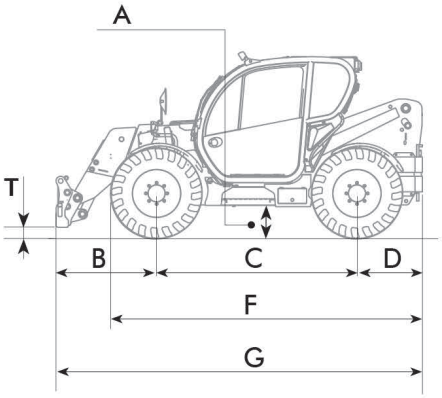

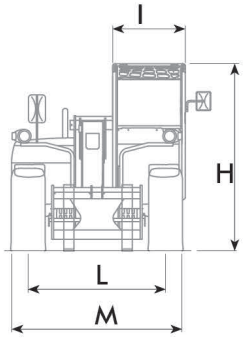

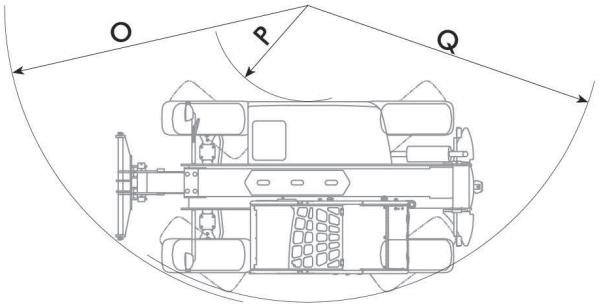

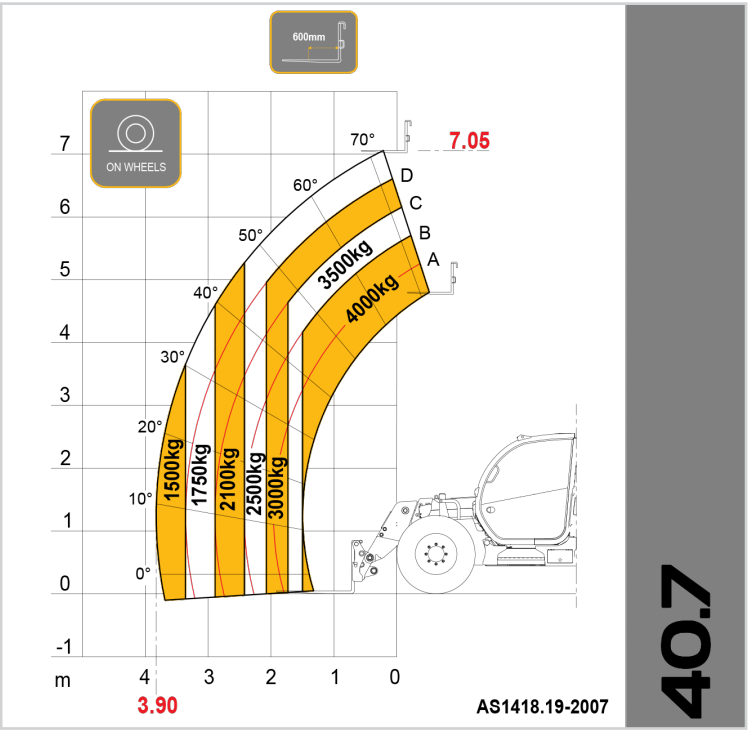

40.7

SPECIAL FEATURES

- Easy ride boom suspension
- LED lighting pack
- Canvas seat cover
- Radio/CD
- Window tint
- Light on head of boom
- Side shift carriage
- Dual front work lights which can be swivelled on the cabin
- Dual rear work lights which can be swivelled on the cabin
- Double reversing fan

The
Capital Equipment
Specialists

Distributed by the AWD Group and their network of authorised dealers.

AWD Group - 25 Garner Place, Ingleburn NSW 2565
Tel. +61 2 8795 4555 - www.dieci.com.au
info@awdgrp.com.au

Illustrations and photos show the standard international models and may or may not include optional equipment, accessories, customer installed or modified parts, optional parts and all standard equipment with some differences in colour and features. Machine specifications are subject to change without notice and additional load charts and machine or attachment specifications may be available on request. Please refer to the operators manual for correct machine and attachment operation.

Printed in Australia SKT Haymaster EXTRA-EC-AU | 1.4 2019