William Shore Memorial Pool District

--HORIZON CENTER RELOCATION PROJECT--

Job Locations:
205 E. 5th St.,
&
223 E. 8th St.
Port Angeles, WA 98362

Project Numbers: PW-2018-02

February 2019

PROJECT MANUAL

TABLE OF CONTENTS

DIVISION 00 - PROCUREMENT AND CONTRACTING REQUIREMENTS ---- 4
00 01 02 - Project Information ---- 5
00 01 15 - List of Drawing Sheets ---- 6
00 11 13 - Advertisement for Bids ---- 7
00 21 13 - Instructions to Bidders ---- 9
00 25 13 - Pre-Bid Meeting ---- 16
00 31 21 - Survey Information ---- 17
00 31 24 - Environmental Assessment ---- 18
00 31 26 - Existing Hazardous Material Information ---- 19
00 41 13 - Bid Form ---- 20
00 43 25 - Pre-Bid Substitution Request Form ---- 24
00 52 13 - Public Works Contract Agreement ---- 26
00 60 00 - Public Works Contract Addendums ---- 28
00 62 11 - Submittal Transmittal Form ---- 31
00 62 76 - Application for Payment Form ---- 33
00 62 79 - Request for Payment for Materials on Hand ---- 35
00 63 13 - Request for Information Form ---- 36
00 63 25 - Substitution Request Form ---- 37
00 63 57 - Change Order Request Form ---- 39
00 72 13 - General Conditions ---- 43

DIVISION 01 – GENERAL REQUIREMENTS ---- 81
01 11 00 - Summary of Work ---- 82
01 23 00 - Alternates ---- 84
01 25 00 - Substitution Procedures ---- 85
01 26 00 - Contract Modification Procedures ---- 88
01 29 76 - Progress Payment Procedures ---- 90
01 31 00 - Project Management and Coordination ---- 94
01 31 19 - Project Meetings ---- 97
01 32 16 - Construction Progress Schedule ---- 98
01 33 00 - Submittal Procedures ---- 101
01 35 23 - Owner Safety Requirements ---- 104
01 41 00 - References ---- 110
01 45 00 - Contractor Quality Control ---- 113
01 45 23 - Testing and Inspection Services ---- 115
01 50 00 - Temporary Facilities and Controls ---- 118
01 71 23 - Field Engineering ---- 119
01 73 29 - Cutting and Patching ---- 122
01 77 00 - Close Out Procedures ---- 125

DIVISION 02 – TECHNICAL SPECIFICATIONS ---- 126
01 57 13 Temporary Erosion and Sediment Control ---- 127
02 43 00 STRUCTURE MOVING ---- 129
03 20 00 REINFORCING STEEL ---- 134
03 30 00 CAST IN PLACE CONCRETE ---- 135
06 15 00 ROUGH CARPENTRY ---- 137
07 31 13 ASPHALT SHINGLES ---- 140
09 21 00 GYPSUM BOARD ASSEMBLIES ---- 143

09 90 00 PAINTS AND COATINGS ---- 146
20 00 00 GENERAL MECHANICAL REQUIREMENTS ---- 152
22 00 00 GENERAL PLUMBING REQUIREMENTS ---- 156
26 00 00 ELECTRICAL – GENERAL ---- 157
31 11 00 CLEARING AND GRUBBING ---- 163
31 22 00 GRADING ---- 165
31 23 00 EXCAVATION AND FILL ---- 167
32 11 00 BASE COURSES ---- 169
32 12 16 ASPHALT PAVING ---- 171
33 10 00 WATER UTILITIES ---- 173
33 40 00 STORM DRAINAGE ---- 175
TAB 4 - REDUCED SIZE BUILDING PLANS ---- 177
TAB 5 - SITE CONSTRUCTION PLANS ---- 178

TAB 1

DIVISION 00 - PROCUREMENT AND CONTRACTING REQUIREMENTS

00 01 02 - Project Information

PART 1 GENERAL

1.01 Project Identification

A. Project Name: Horizon Center Relocation Project
B. Project Number: PW-2018-02
C. Owner: William Shore Pool District.
D. Owner's Project Manager: Steve Burke, William Shore Pool District, 360-460-3526, sburke@williamshorepool.org

1.02 Project Description

A. Summary Project Description:
    1. The relocation of the building located at 205 E. 5th St. Port Angeles, WA to the new location located at 223 E. 8th St. Port Angeles, WA.
B. Scope of Contract:
    1. Preparation and moving of building, preparation of new location, reconstruction of building to existing conditions, landscaping and parking.
C. Construction Timetable:
    1. Actual building move to occur prior to May 15, 2019.
    2. Commence 30 days after notice to proceed and completed within 90 days.
D. Engineers Estimate: $275,000 - $350,000

1.03 Procurement Timetable

A. The Owner reserves the right to change the schedule or terminate the entire procurement process at any time. See Section 00 11 13 for bid schedule.

1.04 Project Consultants

A. Project A/E of Record: Steve Zenovic, Zenovic and Associates, 301 E 6th St #1, Port Angeles, WA 98363. Phone (360) 417-0501
B. Project Geotechnical: Shawn E. Williams, EnviroSound Consulting, P. O. Box 776, Tracyton, WA 98393. Phone (360) 698-5950

1.04 Procurement Documents

A. Availability of Documents: Complete sets of procurement documents may be obtained at:
    1. Zenovic and Associates, 301 E 6th St #1, Port Angeles, WA 98363. Phone (360) 417-0501
    2. William Shore Pool, 225 E. 5th St., Port Angeles, WA 98362. Phone (360) 460-3526

End of Section

00 01 15 - List of Drawing Sheets

BUILDING PLANS

- **A1 – ELEVATIONS**
- **A2 – ELEVATIONS**
- **A3 – FOUNDATION PALN**
- **A4 – MAIN FLOOR PLAN**
- **A5 – DETAILS**

SITE PLANS

- **1 – COVER SHEET & GENERAL NOTES**
- **2 – TEMPORARY EROSION AND SEDIMENT CONTROL PLAN**
- **3 – TEMPORARY EROSION AND SEDIMENT CONTROL DETAILS**
- **4 – PAVING AND GRADING PLAN**
- **5 – PAVING AND GRADING DETAILS-1**
- **6 – PAVING AND GRADING DETAILS-2**
- **7 – UTILITY PLAN**
- **8 – UTILITY DETAILS**
- **9 – HORIZON CENTER DEMOLITION AND TEMPORARY EROSION AND SEDIMENT CONTROL PLAN**

00 11 13 - Advertisement for Bids

The William Shore Memorial Pool District is inviting SEALED BIDS to be received by the William Shore Memorial Pool Board of Commissioners, 225 E.5th St., Port Angeles, Washington no later than **2:00 p.m. on Tuesday, March 19, 2019 (PST)** for:

Project Name: Horizon Center Relocation
Project Number: PW-2018-02

Complete drawings and specifications may be obtained from http://www.williamshorepool.org. A set of printed plans and documents may be purchased from Pen Print Printers located at 230 A E.1st St., Port Angeles, WA 98362, (360) 457-3404. Bidding documents can be reviewed at the District Office, 225 E. 5th St., Port Angeles, WA 98362. All bidding and related questions should be directed to Project Manager at 360-460-3526 or email at sburke@williamshorepool.org

The sealed bids must be clearly marked on the outside of the envelope, "**BID PROPOSAL – Horizon Center Relocation Project"** and addressed to: William Shore Memorial Pool District Board of Commissioners. Bids must be mailed, delivered by courier service, or hand-delivered to Steven Burke, William Shore Pool Project Manager, at 225 E. 5th St., Port Angeles, Washington. Bid documents delivered to other offices or submitted after the deadline will **not** be accepted or considered nor will bids received by facsimile or e-mail. Note: All Bids shall include a 5% Bid Guarantee.

William Shore Memorial Pool District hereby notifies all bidders that it will affirmatively ensure that in any contract entered into pursuant to this advertisement, disadvantaged business enterprises as defined in Title VI of the Civil Rights Act of 1964 at 49 CFR Part 23 will be afforded full opportunity to submit bids in response to this invitation and will not be discriminated against on the grounds of race, color, national origin, or sex in consideration for an award.

This bid is subject to the requirements of the Bid Documents as defined in *Division 00 21 13 - Instructions To Bidders*.

A/E Design Professional of Record: *Zenovic and Associates, Inc.*

Bids shall be presented in the form of a total Base Bid proposal under a Lump Sum Contract plus any additive or deductive alternates that are included on the Bid Form. A bid must be submitted on all bid items and alternates; segregated bids will not be accepted. Plans and specifications are available from our website at http://www.williamshorepool.org or Zenovic and Associates in Port Angeles.

NOTE: The bid shall include all taxes imposed by law except Washington State Sales Tax. Sales tax shall not be included in the bid price, but shall be noted on the Bid Form in the space provided and consistent with the Instructions to Bidders.

The William Shore Memorial Pool District Board of Commissioners will determine the lowest responsible bidder in accordance with the terms of RCW Section 35.61.135. At its sole discretion, the William Shore Memorial Pool District Board of Commissioners reserves the right to reject any or all bids, and to waive as an informality any immaterial irregularities in the bids received.

No Bidder may withdraw his bid for **60 days** after the actual date of the opening thereof.

Construction Timeframe: April 2019 through July 2019 *

The Horizon Center facility will need to be removed prior to May 15, 2019. The end date of the project will be 90 days from the time of the Notice to Proceed.

There will be an on-site walk-through conducted **Thursday, February 28, 2019 at 1:00 pm**. All interested bidders are to meet at the site, located at 205 E. 5th St. (Next to the William Shore Pool) in Port Angeles. This will be the only opportunity for bidders to review the as-built conditions. Bring any tools, equipment, etc., needed for personal documentation. Staff and the Design Consultants will be on site throughout the afternoon to answer questions and provide access for bidders.

APPROVED this ___ day of _____2019.

_____
Steven D. Burke, Executive Director

00 21 13 - Instructions to Bidders

PART 1: BIDDING REQUIREMENTS

1. Contractor's Registration

A. All bidders must be registered by the Washington State Department of Labor and Industries and hold a state contractor's license in the appropriate area in accordance with R.C.W. 18.27.020.

2. Site Investigation and Conditions Affecting the Work

A. The bidder shall examine the Contract Documents and any other data made available to the bidder relating to the Work, and shall comply with all instructions and provisions. The bidder shall promptly notify the District of ambiguities, inconsistencies, or errors, if any, which it may discover upon examination of the Contract Documents and any other data made available to the bidder relating to the Work. The submission of a Bid shall constitute an acknowledgement upon which the District may rely that the bidder has thoroughly examined and is familiar with the Contract Documents and has reviewed all applicable federal, state and local statutes, regulations, ordinances and environmental documents relating to the work and all permits which have been applied for and/or issued pertaining to the Work. The failure or neglect of a bidder to examine any of the Contract Documents, statutes, regulations, ordinances, environmental documents or permits shall not relieve the bidder from any obligations with respect to the Contract Documents or the Work.

B. The bidder shall verify that all documents provided by the District, and upon which the bidder is basing its bid, are full and complete with no missing pages, sheets or unintentional blank spaces. Submittal of a bid indicates the bidder has verified it has obtained all District-supplied Contract Documents. No claim for additional work due to missing bid information will be considered.

C. If the bidder elects to review or download Contract Documents electronically from websites it is the bidder's responsibility to ensure that all documents are complete and that all addenda have been reviewed prior to submission of Bid.

3. Inspection of Work Site

A. Bidder shall inspect and compare the work site and Contract Documents to evaluate the location of the Work, the actual physical conditions of the site, and surface and subsurface conditions ordinarily encountered and generally recognized as inherent in the Work. Bidder shall obtain written permission from the District prior to entering the work site or conducting physical testing of the work site, except for attendance during a scheduled pre-bid examination.

B. If the bidder finds facts or conditions which appear to conflict with the Contract Documents or with any other data made available to the bidder relating to the Work, the bidder shall promptly notify the District in writing.

4. Clarification of Contract Documents

A. Requests for interpretation or reports of ambiguities shall be made in writing and delivered to the District at least seven (7) calendar days before the Bid submittal deadline. Clarifications, interpretations, or supplemental instructions which change the scope of work and or schedule described in the contract documents, will be issued only in the form of written addenda. All addenda shall become part of the Contract Documents and any subsequently awarded Contract.

B. Copies of addenda will be mailed, delivered, faxed, or electronically transmitted to all plan holders of record at the respective address furnished for such purposes and posted on District website.

C. Each bidder shall acknowledge the receipt of all addenda issued on its Bid Form

D. Bidders shall not rely upon any oral statements or conversations, whether at the pre-bid conference or otherwise, that they may have with District employees, agents or representatives regarding the Contract Documents. No oral clarification or interpretations will be made to any bidder as to the meaning of the Contract Documents.

5. Pre-Bid Conference

A. Prospective bidders and primary subcontractors are strongly encouraged to attend a pre-bid conference and site visit as stipulated in the advertisement for bid. Attendees should review the information and safety precautions set forth in the Contract Documents to determine for themselves appropriate protective clothing or equipment. Attendees further agree to indemnify and hold the District harmless from any and all claims of personal injury arising from their participation in the site visit

6. Substitution Requests

A. Products, equipment, materials or methods described in the Contract Documents are to establish a standard of quality, function, appearance and dimension. A proposed substitution shall have equal attributes in all respects.

B. During the bidding period written requests by prime bidders for substitutions may be considered if received by the District at least ten (10) days prior to the bid submittal deadline. The District may, in its sole discretion, defer the consideration of a proposed substitution until after Contract award.

C. Each substitution request shall use *Division 00 63 25 – Substitution Request Form* and shall describe the proposed substitution in its entirety including the name of the material or equipment, drawings, catalog cuts, performance or test data and all other information required for an evaluation. The submittal shall also include a statement noting all changes required in adjoining, dependent or other interrelated work necessitated by the incorporation of the proposed substitution. The bidder shall bear the burden of proof to show that the proposed substitution meets or exceeds the required function and is equal or superior to the specification.

D. The District may require that samples be submitted or demonstration made prior to approval. The District's decision of approval or disapproval of a proposed substitution shall be final.

E. Approval of substitutions will be made by addenda.

PART 2: BID PREPARATION AND SUBMITTAL

1. Preparation of Bids

Bidder shall comply with the following instructions in preparing its bid using the attached Bid Form provided by the District.

A. All prices on the bid form shall be in U.S. dollars.

B. The Bid Form shall be manually signed by an authorized representative of the bidder. All blank spaces must be filled in.

C. The name, address, and Contractor's license number of bidder shall be typed or printed on the Bid Form in the space provided.

D. For lump sum bids the total Contract Sum shall be submitted.

E. For unit price bids a price shall be submitted for each item of the Work, an extension thereof, and, if requested, the total Contract Sum.

F. The price on the bid form for that element of Work shall include everything necessary for the prosecution and completion of the Work in accordance with the Contract Documents including, but not limited to, furnishing all required materials, equipment, tools, transportation of District furnished materials, plant and other facilities and all management, superintendence, labor and services, and field design, except as may be otherwise provided in the Contract Documents.

G. Estimated quantities, if any, set forth on the bid form are estimates only, being given only as a basis for the comparison of Bids, and the District does not warrant, expressly or by implication, that the actual amount of work will correspond to the estimated quantities. The District reserves the right to increase or decrease the amount of any class or portion of the Work and to make changes in the Work as the District may deem necessary or appropriate. The basis of payment for unit price bid items for which estimated quantities were set forth on the bid form shall be the actual number of unit items provided or performed under this Contract. In the event of a 20% quantity increase or decrease, the unit price may be adjusted as provided in the General Conditions.

H. Bidder shall bid upon all alternates indicated in the Bid Form. When bidding on alternates for which there is no charge, bidder shall write the words "No Charge" in the space provided on the

Bid Form. If a bidder fails to bid an alternate, or notes "No Bid", "N/A" or "Zero", the bid will be considered non-responsive. If the bidder indicates "Included" in the price of an alternate it will be construed as meaning that there will be no change in the Contract Sum and that the alternate is included in the Contract Sum. Alternate bids will not be considered unless requested in the Bid Form.

I. Bidders shall acknowledge receipt of all addenda by identifying the addendum number in the space provided in the Bid Form.
J. Owner may extend the Bid submission date if the addition of addenda results in the bidders needing additional time to prepare and submit their bid.
K. Bidder shall include in the bid all allowances if provided in the Bid Form. Owner will pay the difference if the actual cost exceeds the allowance.

2. Taxes

A. The Work to be performed under this Contract constitutes a "retail sale" as such term is defined in RCW 82.04.050. The prices on the bid form shall not include state or local retail sales taxes. The District will pay state and local retail sales tax on each progress payment and final payment to the Contractor for transmittal by the Contractor to the Washington State Department of Revenue or to the applicable local government. The Contractor will pay retail sales tax on all consumables used during the performance of the work and on all items which are not incorporated into the final work, which tax shall be included in the prices on the bid form.
B. No increase will be made in the amount to be paid by the District under this Contract because of any misunderstanding by or lack of knowledge of the Contractor as to liability for, or the amount of, any taxes for which the Contractor is liable or responsible by law or under this Contract.
C. Sales tax shall be shown as a separate item on the bid form. In any case where it is not included as a separate item, the District will add the sales tax to the total of the bid prices shown.

3. Bid Guarantee

A. The bid shall be accompanied by a Bid Guarantee in an amount at least 5% of the total Contract Sum.
B. The Bid Guarantee shall be in one of the following forms and made payable to the District: a bid bond, either the form provided, or a form acceptable to the District which contains provisions substantially similar to those provided, duly completed by a surety company authorized to do business in the state of Washington; a U.S. postal money order; or a certified check or cashier's check drawn upon a banking institution. The surety signing the bid bond must appear on the U.S. Treasury Department's most current list (Circular 570 as amended), and the surety's name must appear in the current Authorized Insurance Company List in the State of Washington published by the Office of the Insurance Commissioner. Attorneys-in-fact who sign bid bonds must file with each bond a certified and effectively dated copy of their Power of Attorney.

4. Bid Submittal

A. The Bid and the bid guarantee shall be enclosed in a sealed envelope marked "bid submittal by" followed by the name and address of the bidder, the District-designated project name, and the date and time for the opening of Bids.
B. If the Bid is mailed, it shall be addressed to the William Shore Pool District, 225 E. 5th St., Port Angeles, WA 98362. The Bid shall be enclosed within another envelope with the notation "BID ENCLOSED" on the face.
C. If the Bid is delivered, it shall be delivered to the William Shore Pool District facility located at 225 E. 5th St., Port Angeles, WA 98362
D. No Bid shall be considered which has not been received at the District's main office reception desk before the Bid submittal deadline specified in the Advertisement for Bids. Bidder shall assume full responsibility for timely delivery of its Bid at the specified location.
E. Oral, telephonic, telefaxed, electronic, or telegraphic Bids are invalid and will not receive consideration.

5. Withdrawal Or Modification Of Bid

A. Withdrawal and Resubmission of Bid: After submitting a bid to the Owner, a Bidder may withdraw its bid if the Owner receives a request from a Bidder to withdraw the bid prior to the bid submission deadline. Any request to withdraw a bid which is received after the bid submission deadline will not be considered. The Bidder may revise such a bid and resubmit it if the revised bid is received prior to the bid submission deadline.

B. Modification of Bid: After a Bidder has withdrawn its bid as described in the paragraph above, submitting a bid to the Owner, a Bidder may revise its bid if the Owner receives the revised bid on the required Bid Form prior to the bid submission deadline, and the revised bid shall be submitted in a properly marked and sealed enveloped prior to the bid submission deadline. Any bid modification which is received after the bid submission deadline will not be considered.

6. Bid Opening

A. Unless stated otherwise in the Advertisement for Bids, all Bids which have been properly identified and received will be publicly opened and the prices read aloud. No evaluation of the Bids will be made at that time except for the announcement of the apparent low bidder.

7. Late Submissions

A. Any bid, bid modification or request to withdraw a bid which is received after bid opening time will not be considered.

B. The only acceptable evidence to establish the time of receipt at the office designated in the advertisement for bid is the time/date stamped or printed by Owner on the bid wrapper or other documentary evidence of receipt maintained by Owner.

8. Bid Validity

A. All Bids submitted shall be valid and binding on the bidder for a period of sixty (60) days following the Bid submittal deadline and for any extension of time granted by the bidder.

PART 3: BID EVALUATION

1. Evaluation standard

A. Bids will be evaluated by the District to determine which Bid is the lowest, responsive Bid by a responsible bidder. The District, at its sole discretion, will base the evaluation on the Base Bid or on the Base Bid plus selected Additive/Subtractive Bid(s).

2. Verification of Bid Prices

A. Prices set forth in the Bid will be reviewed by the District for mathematical accuracy. The District reserves the right to correct mathematical errors or complete mathematical calculations that are obvious on the face of the Bid. In the event of a discrepancy between a unit price and the extended amount for a bid item, the unit price will control. The prices, corrected for mathematical errors, shall be used as the amount of the bid items for evaluation and award purposes.

3. Claim of Error

A. A bidder claiming error in its Bid must submit supporting evidence including cost breakdown sheets within 24 hours of Bid opening and provide any other supporting documentation requested by the District. In the event the bidder demonstrates an error in the Bid to the District's satisfaction, the District may allow the bidder to withdraw its Bid.

4. Bid Evaluation

A. Bids which are incomplete, or which are conditioned in any way, or which contain erasures, alterations, or items not called for in the Bid Form, or which are not in conformity with the law or with these Instructions, shall be rejected as nonresponsive if the irregularity is material and may be rejected as nonresponsive if the irregularity is not material.

B. Owner reserves the right to reject any or all bids and to waive as an informality any nonmaterial irregularities in the bids received.

C. If the bid includes a supplemental schedule of unit prices for labor and materials, or other items for the purpose of establishing a cost basis for unforeseen contract changes, Owner reserves the right to reject, without impairing the balance of the bid, any or all such predetermined unit prices.

D. The Owner may consider a bid irregular and reject it if: any of the Bid item prices are excessively unbalanced (either above or below the amount of a reasonable Bid) to the potential detriment of the Owner."

5. Responsive Bids

A. The District, in its sole discretion, reserves the right to determine Bid irregularities which render a Bid non-responsive, and to waive as an informality any immaterial irregularities in the Bid. A Bid shall be considered irregular and may be rejected by the District as non-responsive for reasons including, but not limited to:
   1) If the bid form furnished or authorized is not used or is altered;
   2) If the bid form or any required supplemental documents are incomplete, contain any additions, deletions, conditions, or otherwise fail to conform to the District's requirements;
   3) If the bidder adds any provisions reserving the right to reject or accept the award, or enter into the contract;
   4) If the Bid or Bid Guaranty is not properly executed, or shows an incorrect amount;
   5) If the Bid fails to include a price for every bid item;
   6) If the District reasonably deems the Bid Guaranty inadequate; or
   7) If the District deems any of the bid prices to be excessively unbalanced either above or below the amount of a reasonable bid price for the item of Work to be performed, to the potential detriment of the District

6. Bid Qualifications

A. It is the intent of the District to award a contract to the low responsible bidder. Before award, the bidder must meet the following bidder responsibility criteria to be considered a responsible bidder. The bidder may be required by the District to submit documentation demonstrating compliance with the criteria. The bidder must:
   1) At the time of bid submittal, have a current certificate of registration in compliance with chapter 18.27 RCW.
   2) Have a current Washington Unified Business Identifier (UBI) Number.
   3) If applicable:
      a. Have industrial insurance (workers' compensation) coverage for the bidder's employees working in Washington, as required by Title 51 RCW;
      b. Have a Washington Employment Security Number as required Title 50 RCW.
      c. Have a Washington Department of Revenue state excise tax registration number, as required by Title 82 RCW.
   4) Not be disqualified from bidding on any public works contract under RCW 39.06.010 or 39.12.065(3).
   5) Within the three-year period immediately preceding the date of the bid solicitation, not have been determined by a final and binding citation and notice of assessment issued by the department of labor and industries or through a civil judgment entered by a court of limited or general jurisdiction to have willfully violated, as defined in RCW 49.48.082, any provision of chapter 49.46, 49.48, or 49.52 RCW.

B. In order to verify that the bidder has adequately incorporated all elements of the Work and the requirements of the Contract Documents in its bid prices, the bidder will make available upon request, for the District's review a complete itemization of its Bid, and clearly define all phases of its work.

C. Prior to award, if requested by the District, the bidder and selected proposed subcontractors or suppliers shall attend a bid evaluation conference and shall bring to the conference any documents requested by the District to evaluate the Bid.

7. Collusion

A. If the District determines that collusion has occurred among the bidders, none of the Bids of the participants in such collusion will be considered. The District's determination of collusion shall be conclusive.

8. Return of Bid Guaranty

A. As soon as the bid prices have been compared, the District will return the Bid Guaranty accompanying any Bids which, in the District's judgment, would not be considered for award. All other Bid Guaranties will be held until the Contract and bonds have been executed, after which all remaining Bid Guaranties, except those which have been forfeited, will be returned.

9. Single Bid Received

A. If the District receives a single responsive Bid from a responsible Bidder, the District shall have the right, in its sole discretion, to conduct a price or cost analysis on such Bid. The bidder shall promptly provide all cost or pricing data, documentation and explanation requested by the District to assist in such analysis. By conducting such analysis, the District shall not be obligated to accept the single Bid; the District reserves the right to reject such Bid or any portion thereof.

10. Rights of the District

The District reserves the right to accept the Bid of the lowest responsive Bid from a responsible bidder, to reject any or all Bids, republish the Advertisement for Bids, revise or cancel the work to be performed, or to do the work otherwise, if in the judgment of the District, the best interests of the District is served thereby.

PART 4: AWARD OF CONTRACT

1. Notice of Award

A. The acceptance of a Bid will be evidenced by a written notice of award delivered to the bidder whose Bid is accepted.

B. Within ten (10) days after issuance of the notice of award the bidder shall supply the District with:
   1) Agreement form set forth in *Division 00-50 13* shall be executed in duplicate and returned,
   2) Payment and Performance Bonds, in form acceptable to District, in Contract Award Amount plus Washington State Sales Tax (Addendum A)
   3) Retainage and Investment Option (Addendum B);
   4) Industrial Insurance Premiums and Confession of Judgment (Addendum C);
   5) Certificate of Insurance with endorsements as required in the Contract Documents.

C. The bidder shall not commence physical modification of the work site until the District has issued its notice of award, notice to proceed, and the District has received the executed Agreement form and bonds and certificates of insurance meeting the requirements of the Contract Documents.

2. Performance and Payment Bonds

A. The bidder awarded this Contract shall furnish performance and payment bonds on forms set forth in *Division 00 60 00* , or similar form acceptable to the District in the amount of 100% of the total Contract Sum as security for the faithful performance and completion of the Work. Such bonds shall be executed and sealed by a duly licensed surety registered with the Washington State Insurance Commissioner, and the surety's name shall appear in the current Authorized Insurance Company List in the State of Washington published by the Office of the Insurance Commissioner. Attorneys-in-fact who sign bonds must file with each bond a certified and effectively dated copy of their Power of Attorney.

B. The scope of the performance and payment bonds shall not affect or alter the liabilities of the Contractor to the District under the terms of the Contract Documents.

C. The District may require the surety to appear and qualify itself upon the bond. If at any time the District determines, in its sole judgment, that the surety is insufficient, the District may require the Contractor to furnish additional surety in form and arrangement satisfactory to the District and in an amount not exceeding that originally required. Payments will not be made on the Contract until sufficient surety as required is furnished.

D. The person signing the performance bond on behalf of the Contractor shall also sign the Agreement form and bonds.

3. Extension of Time

A. If the Agreement form is not executed or not submitted to the District within the time required and, in the District's discretion, circumstances warrant an extension of time, it may extend the time for

execution of the Agreement form or for furnishing bonds and insurance certificates for a period not to exceed ten (10) additional days.

4. Failure to Execute Contract

A. If the bidder awarded the Contract fails to execute the requirements listed in *Part 4 #1B* within ten (10) days from delivery of the notice to award, or declares in writing its intent not to execute the Contract, its Bid Guaranty shall be forfeited to the District and the District may issue notice of award to the second lowest responsible Bidder, and in like manner until the Agreement form and bonds are executed by a responsible bidder to whom award is made, or further Bids are rejected. Forfeiture of the Bid Guaranty shall not limit the District's right to recover damages from the bidder caused by the bidder's failure to execute the Contract.

5. Cancellation of Award

The District reserves the right to cancel the award of any Contract at any time before the execution of said Contract by all parties without liability to the District.

END OF SECTION

00 25 13 - Pre-Bid Meeting

PART 1: GENERAL

1. A pre-bid meeting and site inspection will be held at the time and place specified in *Division 00 11 13 – Advertisement to Bid*.
2. Purpose is to provide bidders an opportunity to familiarize themselves with the Work and with existing conditions. Consultant and Owner's representative(s) will be present.
3. Site access is restricted at 205 E. 5th St. This may be Bidders' only opportunity to inspect the site.
4. All prime contract and major subcontract Bidders are strongly advised to attend. Others are invited to attend.
5. No information provided by the Consultant, the Owner, or any of their representatives at the pre-bid meeting and site inspection shall be binding, unless such information is included in an Addendum.

END OF SECTION

00 31 21 - Survey Information

PART 1: GENERAL

1. All Surveys of both locations are incorporated in the drawing sheets as outlined in *Division 00 01 15 – List of Drawing Sheets*.

END OF SECTION

00 31 24 - Environmental Assessment

PART 1: GENERAL

1. A Phase 1 Environmental Assessment was competed for 233 E 8th St. and is available for review at Zenovic and Associates.

END OF SECTION

00 31 26 - Existing Hazardous Material Information

PART 1: GENERAL

1. Summary

A. This Section provides the notification required for disclosure of asbestos, lead-containing or other hazardous materials.

2. Hazardous Material Notice

A. The District is reasonably certain that asbestos and lead will not be disturbed by the project. If the Contractor encounters material suspected of containing lead or asbestos which will interfere with the execution of the work, the Contractor shall stop work and notify the Engineer.

3. Notification and Suspension

A. In the event the Contractor detects the presence of potentially contaminated materials not previously identified in this specification, the Contractor shall immediately notify the District. Following such notification by the Contractor, the District shall in turn notify the various governmental and regulatory agencies concerned with the presence of potentially contaminated materials, if warranted. Depending upon the type of contaminated materials identified, the District may suspend work in the vicinity of the discovery under the provisions of *Division 00 72 13 - General Conditions*, *paragraph 5.23.*

1) Following completion of any further testing necessary to determine the nature of the materials involved, the District will determine how the material shall be managed. Although the actual procedures used in resuming the work shall depend upon the nature and extent of the potentially contaminated material, the following alternate methods of operation are foreseen as possible:
   a) Contractor to resume work as before the suspension.
   b) Contractor to move its operations to another portion of the work until measures to eliminate any hazardous conditions can be developed and approved by the appropriate regulatory agencies.
   c) The District to direct the Contractor to dispose or treat the material in an approved manner.
   d) The District to terminate or modify the Contract.

END OF SECTION

00 41 13 - Bid Form

(Fillable Bid Form Available online at www.williamshorepool.org)

Firm Name:_____

___Individual ___Corporation ___Partnership ___Joint Venture

State of Incorporation(if applicable):_____

Address:_____

Telephone:_____ Fax:_____

UBI#:_____ Federal Tax Id#:_____

L&I Registration #:_____

Employment Security #:_____

Washington Department of Revenue
Registration number:_____

Contractor's License#:_____Exp:___

Project Name: Horizon Center Relocation **Project Number: PW-2018-02**

1. The undersigned Bidder proposes and agrees, if this Bid is accepted, to enter into an agreement with the Owner in the form included in the Bidding Documents to perform and furnish all Work as specified or indicated in the Bidding Documents for the Contract Price and within the Contract Time indicated in this Bid and in accordance with the other terms and conditions of the Contract Documents.

2. The Bidder accepts all of the terms and conditions of the Invitation for Bid and Instructions to Bidders, including without limitation those dealing with the disposition of bid security and other Bidding Documents. This Bid will remain subject to acceptance for sixty (60) days after the day of Bid opening. The Bidder shall sign and submit the Agreement between Owner and Contractor (hereinafter called Agreement) with the Bonds and other documents required by the Bidding Requirements within ten (10) days after the date of the Owner's Notice of Award.

3. In submitting this Bid, the Bidder represents, as more fully set forth in the Agreement, that:

    a. the Bidder has examined copies of all the Bidding Documents and of the following Addenda (receipt of all of which is hereby acknowledged):

    No._____

4. The Bidder has familiarized himself with the nature and extent of the Bidding Documents, Work, site, locality, and all local conditions, laws, and regulations that in any manner may affect cost, progress, performance, or furnishing of the Work;

5. The Bidder has carefully studied all reports and drawings of subsurface conditions which are identified in the Bid Documents to Bidders and accepts the determination set forth in the Information Available to Bidders of the extent of the technical data contained in such reports and drawings upon which the Bidder is entitled to rely;

6. The Bidder has correlated the results of all such observations, examinations, investigations, explorations, tests, reports, and studies with the terms and conditions of the Bidding Documents;

7. The Bidder has given the A/E Design Professional written notice of all conflicts, errors, and discrepancies that he has discovered in the Bidding Documents, and the written resolution thereof by the A/E Design Professional is acceptable to the Bidder;

8. This Bid is genuine and not made in the interest of or on behalf of any undisclosed person, firm, or corporation and is not submitted in conformity with any agreement or rules of any group, association, organization, or corporation; the Bidder has not directly or indirectly induced or solicited any other Bidder to submit a false or sham Bid; the Bidder has not solicited or induced any person, firm, or corporation to refrain from bidding; and the Bidder has not sought by collusion to obtain for himself any advantage over any other Bidder or over the Owner;

9. The Bidder acknowledges that he has attended any pre-bid conference scheduled by the Owner or the A/E Design Professional pertaining to this project;

10. The Bidder agrees to show clearly on the envelope in which the Bid is submitted the Project Name and Number, and Invitation to Bid Number; and,

11. The Bidder will complete the Work for the following price(s) **(<u>do not</u> include any gross receipts tax in the price(s)).**

12. Bids shall be presented in the form of a total Base Bid proposal under a Lump Sum Contract plus additive alternates that are selected by the Owner. A bid must be submitted on all bid items and alternates; segregated bids will not be selected by the Owner.

A. LUMP SUM PRICE: (please use typewriter or print legibly in ink)

Base Bid : $_____

Sales Tax: (8.7%): $_____

Total Lump Sum Price: $_____

B. ALTERNATES: All Alternate bid prices noted below by the Bidder shall be for the price differential between work included in the Bidder's Lump Sum Price and the work of each Alternate bid price.

Alternate 1 (circle one) add deduct

Scope:

$

_____

C. UNIT PRICE ITEMS:

ITEM #1:_____ Unit of Measure: _____

$ _____

Bid Guarantee: In accordance with Washington State Law, the William Shore Memorial Pool District requires the submission of a 5% bid bond which guarantees the District that the Contractor will honor its bid and will sign all contract documents if awarded the contract. The District is the obligee and may sue the Contractor and the surety to enforce the bond. If the Contractor refuses to honor its bid, the Contractor and surety are liable on the bond for any additional costs the owner incurs in reletting the contract. This usually is the difference in dollar amount between the low bid and the second low bid. The penal sum of a bid bond often is 10% of the bid amount.

Acceptable forms of Bid Bonds: Bid Bonds may also be submitted as a surety, postal money order, certified check, cashier's check or an irrevocable letter of credit.

Attached here is a bid guarantee in the form of a _____ in the amount of 5% (five percent) of the Total Base Bid Amount.

The Bidder agrees that:

1. The work to be performed under this Contract shall commence no later than **30 days** consecutive days after the date of the written Notice to Proceed;
2. Substantial Completion shall be achieved no later than **90 days** after the date of written Notice to Proceed, except as hereafter extended by valid written Change Order by the Owner.
3. Should the Contractor neglect, refuse, or otherwise fail to complete the Work within the time specified, the Contractor agrees to pay to the Owner in partial consideration for the award of this Contract the amount of $250.00 per consecutive day, not as a penalty, but as liquidated damages for such breach of the Contract until Substantial Completion is achieved.
4. The above prices shall include all labor, materials, removal, overhead, profit, insurance, taxes, etc., to cover the finished work of the several kinds called for. Changes shall be processed in accordance with the Contract Documents.
5. The bidder hereby certifies that, within the three-year period immediately preceding the bid solicitation date, the bidder is not a "willful" violator, as defined in RCW 49.48.082, of any provision of chapters 49.46, 49.48, or 49.52 RCW, as determined by a final and binding

citation and notice of assessment issued by the Department of Labor and Industries or through a civil judgment entered by a court of limited or general jurisdiction.

6. It is understood that the Owner reserves the right to reject any or all Bids and to waive any immaterial irregularities in the bids.
7. The terms used in this Bid and the Bidding and Contract Documents which are defined in the Conditions of the Construction Contract (General, Supplementary, and Other Conditions), included as part of the Bidding Documents, have the meanings assigned to them in those Conditions.

I certify under penalty of perjury under the laws of the State of Washington that the foregoing is true and correct.

1. Signatures:

1. _____ _____
Authorized Signature Title

_____ _____
Printed Name Date

END OF SECTION

00 43 25 - Pre-Bid Substitution Request Form

Project Name: Horizon Center Relocation Project Project No.: PW-2018-02

To: Steven Burke, Project Manager Date:_____

1. We hereby submit for consideration, the following product instead of the specified item for above project:

_____ _____ _____
Section Paragraph Specified Item

Proposed substitution:_____

_____

Supporting Data Attached:
☐ Drawings ☐ Product Data ☐ Samples ☐ Tests ☐ Reports ☐ Other _____

Attached data includes product description, specifications, drawings, photographs, and performance and test data adequate for evaluation of the request; applicable portions of the data are clearly identified.

Attached data also includes a description of changes to the Contract Documents that the proposed substitution will require for its proper installation.

The Undersigned certifies:

- Proposed substitution has been fully investigated and determined to be equal or superior in all respects to specified product.
- Same warranty will be furnished for proposed substitution as for specified product.
- Same maintenance service and source of replacement parts, as applicable, is available.
- Proposed substitution will have no adverse effect on other trades and will not affect or delay progress schedule.
- Proposed substitution does not affect dimensions and functional clearances.
- Payment will be made for changes to building design, including A/E design, detailing, and construction costs caused by the substitution

The undersigned attests function and quality are equal or equivalent to the specified items.
Certification of equal or equivalent performance and assumption of liability for equal or equivalent performance.

_____ By _____Date:___
Signature (print name)

_____ Remarks:_____
Firm

ENGINEER'S REVIEW AND ACTION

☐ Substitution approved
☐ Substitution approved as noted
☐ Substitution rejected - Use specified materials.
☐ Substitution Request received too late - Use specified materials.

Signed by: _____ Date: _____

PROJECT MANAGER REVIEW AND ACTION

☐ Substitution approved
☐ Substitution approved as noted
☐ Substitution rejected - Use specified materials.
☐ Substitution Request received too late - Use specified materials.

Signed by: _____ Date: _____

00 52 13 - Public Works Contract Agreement

PROJECT NAME: Horizon Center Relocation **PROJECT NO: 2018-02**

Bid Process: Advertised Public Works Project

THIS CONTRACT is made and entered into by and between the William Shore Memorial Pool District (Owner), and _____, a Corporation / Partnership / Sole Proprietor, (Contractor). Contractor and Owner may hereinafter be referred to as "Parties." This Contract shall be effective on the last date set forth on the signature page. This Contract shall be the agreed basis of performing the Work identified and defined in the Contract Documents.

1. TERM OF CONTRACT

All work under this Contract is to be completed as indicated:

1. All work under this Contract is to be completed 90 days after Notice to Proceed has been issued
2. Horizon Center building to be moved no later than May 15, 2019.

No work is to be performed prior to written Notice to Proceed by the District.

2. PAYMENT

The District shall pay the Contractor for the work performed under this contract (check one):

____ Time and material, not to exceed: $_____
____ Time and actual expenses incurred, not to exceed: $_____
____ Unit prices set forth in the attached Contractor's bid or quote, not to exceed: $_____
____ Firm Fixed Price set forth in attached contractor bid or quote in the Base Bid amount of: $__
Alternate no1: ____.

FULL CONTRACT AWARD AMOUNT:_____

The Contractor agrees to furnish all material, labor, tools, equipment, apparatus, facilities, etc. necessary to perform and complete in a workmanship like manner the Work called for in the Contract Documents for the Project noted above, according to the terms of this Contract and the Contract Documents, which documents are incorporated herein by reference, as if set forth herein in full.

The Contract Documents include the Advertisement for Bids, Instructions for Bidders, completed Bid Form, Payment and Performance Bonds, General Conditions for Washington State Facility Construction, Modifications to the General Conditions, Supplemental Conditions to the General Conditions, other Special Forms, this Public Works Contract, and the following Drawings, Specifications, and Addenda:

Addendum No. Dated: Addendum No. Dated:

The Contractor further agrees that, from the compensation otherwise to be paid, the Owner may retain the sum of $250.00 for each calendar day thereafter that the Work remains uncompleted,

which sum is agreed upon as the liquidated damages, and the Parties agree this sum is not to be construed as in any sense a penalty.

The Owner hereby agrees to pay the Contractor the Contract Award Amount indicated above, not including State Sales Tax, as consideration for the agreements set forth above, including but not limited to, Contractor's completion of all Work, in strict accord with the Contract Documents, as follows:

This Contract shall be construed and governed by the laws and statutes of the State of Washington.

IN WITNESS WHEREOF, the Parties have executed this Agreement on this ____ day of _____, 20_____.

CONTRACTOR: **OWNER:**

_____ _____
Signature Signature

_____ Cherie Kidd, President
Name William Shore Pool District

Date: _____, 20___

Approved as to Form: Attest:

_____ _____
District's Attorney Rachelle Sires, WSMPD Clerk of the Board

Contract Addendums:
Addendum A: Performance and Payment Bond Form
Addendum B: Retainage Investment Options

END OF SECTION

00 60 00 - Public Works Contract Addendums

Contract Addendum A: Performance and Payment Bond

Bond to the William Shore Memorial Pool District Bond # _____

KNOW ALL MEN BY THESE PRESENTS:
That we, the undersigned, _____ as Principal, and_____

_____a corporation, organized and existing under the laws of the State of Washington, as a surety corporation, and qualified under the laws of the State of Washington to become surety upon bonds of contractors with municipal corporations as surety, are jointly and severally held and firmly bound to the **William Shore Memorial Pool District** in the penal sum of $_____*(100% of Contract amount plus tax*) for the payment of which sum on demand we bind ourselves and our successors, heirs, administrators or personal representatives, as the case may be.

This obligation is entered into pursuant to the statutes of the State of Washington and the ordinances of the William Shore Memorial Pool District.

Dated at _____, Washington, this ____ day of _____, 20___.

The conditions of the above obligation are such that:

WHEREAS, the William Shore Memorial Pool District has let or is about to let to the said the above

bounded Principal, a certain contract, the said contract being numbered _____and providing for

_____(Project Name), which contract is referred to herein and is made a part hereof as though attached hereto, and;

WHEREAS, the said Principal has accepted, or is about to accept, the said contract, and undertake to perform the work therein provided for in the manner and within the time set forth; now, therefore,

If the said Principal,_____, shall faithfully perform all of the provisions of said contract in the manner and within the time therein set forth, or within such extensions of time as may be granted under said contract, and shall pay all laborers, mechanics, subcontractors and materialmen, and all persons who shall supply said Principal or subcontractors with provisions and supplies for the carrying on of said work, and shall indemnify and hold the William Shore Memorial Pool District harmless from any damage or expense by reason of failure of performance as specified in said contract or from defects appearing or developing in the material or workmanship provided or performed under said contract within a period of one year after its acceptance thereof by the William Shore Memorial Pool District, then and in that event, this obligation shall be void; but otherwise, it shall be and remain in full force and effect.

Signed this ____ day of _____, 20___.

_____ _____
Surety Principal

_____ _____

By	By
Title	Title
Surety Address	Agent Address
Surety Contact and Phone Number	Agent Contact and Phone Number

Contract Addendum B: Retainage and Investment Options

CONTRACTOR NAME:_____

DATE: _____

Pursuant to **RCW 60.28.011**, as amended, the District will require a retainage under this contract which will be 5%. Please complete and sign this form indicating your preference of investment options. If you fail to elect an investment option below, the District will hold your Retainage as described in "General Fund Account" Option 1 below:

1. General Fund Account: The District will retain the money in its General Fund Account until forty-five days following final acceptance of the improvement or work as completed. You will not receive interest earned on this money.

2. Interest Bearing Account: The District will deposit Retainage checks in an interest bearing account with the Clallam County Treasurer, not subject to withdrawal until after the final acceptance of the improvement or work is completed, or until agreed to by both parties. Interest on the account will be paid to you.

3. Escrow/Investments: The District will place the Retainage checks in escrow with a bank or trust company until forty-five days following the final acceptance of the improvement or work as completed. When the moneys reserved are to be placed in escrow, the District will issue a check representing the sum of the moneys reserved payable to the bank or trust company and you jointly. This check will be converted into bonds and securities chosen by you and approved by the District and these bonds and securities will be held in escrow. Interest on these bonds and securities will be paid to you as interest accrues.

4. The Contractor may at his/her option choose to submit a bond in lieu of the 5% retainage. Retainage is normally released 45 days after final acceptance of work by the District, or until the District has received clearances from the Department of Labor and Industries, Employment Security Department, and Department of Revenue for payment of taxes and premiums, whichever takes longer, and there are no claims against the retainage filed by subcontractors, suppliers, or workers**.**

_____

Contractor's Signature and Date

_____

Name

_____

Title

00 62 11 - Submittal Transmittal Form

Submittal Number:

Project No.: 2018-02
Project Name: Horizon Center Relocation Project

NOTE: A Transmittal is required for each Specification Section. DO NOT bind together separate submittals from different Specification Sections. This form is to be used *only* if there are no deviations from the Contract Documents.

Date:

TO:

FROM:

SUBMITTAL TYPE:

	☐ Re-Submittal	☐ Information (Waiver)	**Comply with all submittal requirements in the Project Manual as per Section 01 33 00 and the particular Specification Section for which you are transmitting material.**
☐ Product Data	☐ Shop Drawings	☐ Quality Control/Assurance	
☐ Test Reports	☐ Certificate	☐ Contract Closeout	
☐ Design Data	☐ Samples	☐ Other	

Specification Number and Title:

Part	Type	Description

Contractor's Certification:
We have verified that all material or equipment contained in this submittal meets all the requirements specified or shown **(no exceptions)**.

Contractor/Contractor's Representative *(Print Name)* Signature

00 62 76 - Application for Payment Form

(Application for Payment Form is available in Electronic PDF Format)

Project Name: Horizon Center Relocation Project **Project No.: 2018-02**

CONTRACT PAYMENT REQUEST NO. ___

To the best of my knowledge and belief, I certify that all items, units, prices, and quantities listed below on this Payment Request are correct; that all work has been performed, and materials supplied in full accordance with the conditions of project contract. I further certify that all applicable provisions of the following have been observed:

1. **OBLIGATIONS:**
   a. Original Contract Award: $_____
   b. Change Order Approvals to Date: $_____
   c. TOTAL CONTRACT AMOUNT: $_____
2. **PAYMENTS MADE ON CONTRACT**
   a. Paid to Date: $_____
   b. Paid on Change Orders to Date: $_____
   c. Retainage (5%) Held to Date: $_____
   d. TOTAL PAID TO DATE: $_____
3. **REQUEST FOR PROGRESS PAYMENT**
   a. Progress Payment Amount Requested: $_____ *(Attach proof of progress)*
   b. Amount to be held in Retainage (5% of 4a): $_____
   c. TOTAL AMOUNT OF PAYMENT: $_____
4. **AMOUNT LEFT OF CONTRACT**
   a. Total Amount to be Paid on Contract (1c): $_____
   b. Total Amount Paid to Date on Contract (2d+3c): $_____
   c. Total amount left on Contract (4a-4c): $_____

1. *I have attached a list of all of the subcontractors who performed work on the project site during the current billing period noted above (Certificate of Use and Payment of Subcontractors) regardless of whether my application for payment includes a payment request for their work.*

2. *Prevailing wages for this project have been paid in accordance with the prefiled statement or statements of intent to pay prevailing wages, approved by the Industrial Statistician of the Department of Labor and Industries, which are on file with the District.*

3. *I have paid all of my subcontractors and material suppliers for the invoice covering the previous billing period (this amount less retainage) (not applicable if this is the first billing period).*

I certify under penalty of perjury under the laws of the State of Washington that all of the above information and certification statements are true and correct.

Contractor:_____ Date:_____

By:_____ Title:_____

OFFICAL USE ONLY

CONTRACT PAYMENT APPROVALS

This certifies that the above-named Contractor is entitled to the Contract Payment amount listed in item 3C above, and no part of this amount has been previously paid to the Contractor.

_____ _____
Inspector Date

_____ _____
Architect/Engineer Date

Approved for Payment_____ _____
Project Manager Date

Account Code for Payment:_____

00 62 79 - Request for Payment for Materials on Hand

(Form is available in Electronic PDF Format)

Project Name: Horizon Center Relocation Project **Project No.: 2018-02**

REQUEST FOR PAYMENT FOR MATERIALS ON HAND
In accordance with the provisions of the Contract General Conditions, request is made for payment of materials on hand for the following materials:

ITEM NUMBER	QUANTITY	DESCRIPTION OF MATERIAL STORED	VALUE	STORED AT
		SubTotal **Subtract 5% Retainage** **Adjusted Total**		

This form needs to be attached to the Contractor Request for Payment Form when submitting for payment.

Affidavit: *The materials listed above have been purchased exclusively for use on the above-referenced project. The material is separated from the other like materials and is physically identified as our property for use only on the subject contract. The Owner may enter upon the premises for the purposes set forth in the Contract General Conditions of the contract for inspection, checking or auditing, or for any other purpose as Owner considers necessary. It is expressly understood and agreed that this information and affidavit is furnished to the Owner for the purpose of obtaining payment for the above materials before they are delivered to, or incorporated into, the project described above, and that the storage thereof at the location shown is subject to, and under the control of, the Owner.*

_____ _____
(Verified) Project Manager Contractor

Date:_____ Date:_____

00 63 13 - Request for Information Form

(Form is available in Electronic PDF Format)

Project Name: Horizon Center Relocation Project **Project No: 2018-02**

REQUEST FOR INFORMATION Request Date: _____

Requesting Company:_____Name:_____

Contact Number:_____

Subject:_____

Drawing/Spec No.:_____Detail/Sect. No.:_____

Request/Information Details:_____

_____

_____

_____

_____

Presented By:_____ Date:_____

Reviewed By: Engineer Architect Owner Other:_____

Response:_____

_____

_____

_____

Response By:_____ Date:_____

Owner Review By:_____ Date:_____

No Changes Needed
Change Order Required Change/Addenda Reference:_____

NOTE: *This is not a notice to proceed with work involving additional cost and/or time. Notification must be given in accordance with the contract documents, if any response causes any change to the contract documents.*

00 63 25 - Substitution Request Form

(Form is available in Electronic PDF Format)

Project Name: Horizon Center Relocation Project **Project No.: 2018-02**

Substitution Request Form

To:_____ Date:_____

Attn:_____

Project Name: _____ Project Number:_____

Requester:_____ Contact Number:_____

1. We hereby submit for consideration, the following product instead of the specified item for above project:

_____ _____ _____
Section Paragraph Specified Item

Proposed substitution:_____

_____

2. Attach complete dimensional information and technical data, including laboratory tests, if applicable.
3. Include complete information on changes to Drawings and Specifications which proposed substitution will require for its proper installation.
4. Submit with request all necessary samples and substantiating data to provide equal quality, performance, and appearance to that specified
5. Clearly mark Manufacturer's literature to indicate equality or equivalence in performance. Indicate differences in quality of materials and construction.
6. Fill in blanks below:

A. Does the substitution affect the dimensions shown on the drawings?

No Yes. If yes, clearly indicate changes:_____

_____

B. Will the undersigned pay for the changes to the building design, including engineering and detailing costs caused by the requested substitution?

No Yes

Comment:_____

_____

C. What effect does the substitution have on other trades, other Contracts, and the completion date?

_____

D. What effect does the substitution have on applicable code requirements?

_____

E. List any differences between the proposed and specified item:

_____

F. Manufacturer's warranties of the proposed and specified items are:

Identical Different Comment:_____

_____

G. List the names and addresses of three similar projects in which the product was used, the date of installation, and the A/E's name and address (attach a list with the requested information):

1._____

2._____

3._____

H. Cost impact:_____

_____

The undersigned attests function and quality are equal or equivalent to the specified items.
Certification of equal or equivalent performance and assumption of liability for equal or equivalent performance.

_____ By _____Date:_
Signature (print name)

_____ Remarks:_____
Firm

_____

_____
Address

Signature must be by a person having authority to legally bind the Contractor to the above terms.

For use by A/E Accepted Not Accepted Accepted as Noted

Received Too Late

For use by Project Manager Accepted Not Accepted Accepted as Noted

Received Too Late

00 63 57 - Change Order Request Form

(Form is available in Electronic PDF Format)

Project Name: Horizon Center Relocation Project **Project No.: 2018-02**

CHANGE ORDER REQUEST/APPROVAL

1. REQUESTOR INFORMATION *(Contractor Completes)*

Contractor:_____ Date:_____

Contac Name:_____ Contact Number:_____

Change at the Request of: Contractor District Engineer Architect

Area of Change: Scope Budget Schedule Quality

Reason for Change: Error Omission Unforeseen Owner Requested

2.PURPOSED CHANGE *(Contractor Completes)*

Drawing Reference:_____ Specification Reference:_____

A. Change Requested*:_____

_____

_____

_____

B. Justification:_____

_____

_____

C. Impact of Not Making Change:_____

_____

_____

**Attach any specifications and details for the changes*

D. Cost of Change Order:
Attached is an Approved Change Order Proposal. The amount requested for the change order is:

$_____(*Amount*)
The foregoing amount covers all costs associated with this change order. All other provisions to the contract remain in full force and effect. We understand that no invoices incorporating the amount of this

change will be honored prior to the performance of the work specified and return of the fully executed Change Order.

D. Time Extension:
If a time extension is required, a critical path justification must be provided, otherwise the extension will not be allowed.

Change Effects Substantial Completion Date:

Current Substantial Completion Date:_____

New Substantial Completion Date:_____

Change does not Affect Substantial Completion Date

3. OPTIONAL FIELD ORDER APPROVAL *(Project Manager Completes if necessary)*

When signed, this is a field order to execute the above changes to avoid undue delay or stopage of work. When final costs are available, complete the remainder of this Change Order Request/Authorization prior to invoicing.

THE COST OF THE CHANGE SHALL NOT EXCEED $_____WITHOUT PROPER AUTHORIZATION FROM THE PROJECT MANAGER FOR THE WILLIAM SHORE MEMORIAL POOL DISTRICT.

Contractor:_____ Date:_____

Project Manager:_____ Date:_____

4. APPROVING SIGNATURE OF REQUESTOR *(Contractor signs)*

CONTRACTOR'S RELEASE OF CLAIMS AND WAIVER. By signing below, the Contractor acknowledges that this Change Order constitutes full and final compensation for the work described in this Change Order and any other work affected by the work described herein (collectively, the "Change Order Work"), and, upon receipt of payment for the Change Order Work, hereby releases the William Shore Memorial Pool District from any and all liability under the contract for any additional compensation for the Change Order Work, including but not limited to, claims for additional compensation for any materials, labor, services, overhead, profit, and any time extension or damages related to any delay or effect on the Contractor's schedule for performance of the Contract and the Change Order work. Contractor expressly waives any contract right to pursue any further claim related to the Change Order Work.

Signature:_____ **Title:**_____

Name:_____ **Date:**_____

5. A/E REVIEW AND RECOMENDATIONS (*Architect or Engineer Completes)*

We have carefully examined this proposed Change Order Request and find it to be in order and the cost to be reasonable.

We recommend Approval We do not Recommend Approval *(must provide reason)*

Approval with Modifications

Comments/Reasons/Modifications:_____

_____

_____

_____

_____

A/E Firm Name:_____ Date:_____

Name:_____ Contact Number:_____

Signature:_____ **Title:**_____

6. DISTRICT REVIEW *(Project Manager Completes)*

The William Shore Memorial Pool District hereby accepts the foregoing proposal and authorizes the performance and invoicing for the changes specified. This instrument constitutes a Change Order to the contract only when an authorizing signature is affixed.

A. Project Manager Approval:

Project Manager Name:_____Contact Number:_____

Approved Disapproved Approved with Modifications

Modifications:_____

_____

Authorized Signature:_____ **Date:**_____

B. Board of Commissioners Approval:

Not Required Approved Disapproved Date:_____

Authorized Signature:_____ **Title:**_____

7. CONTRACT ADJUSTMENTS *(Project Manager to complete)*

Official Change Order Number:_____

The contract has been revised as follows:

Original contract sum: $ _____

Previously authorized Change Orders: $_____

Contract Total prior to this Change Order: $_____

This Authorized Change Order amount: $_____

The New Contract Total is: $_____

Contract Time will be changed by_____days.

The Substantial Completion Date as of this change is:____.

00 72 13 - General Conditions

TABLE OF CONTENTS

PART 1 - GENERAL PROVISIONS 45
1.01 DEFINITIONS 45
1.02 ORDER OF PRECEDENCE 46
1.03 EXECUTION AND INTENT 47

PART 2 - INSURANCE AND BONDS 47
2.01 CONTRACTOR'S LIABILITY INSURANCE 47
2.02 COVERAGE LIMITS 48
2.03 INSURANCE COVERAGE CERTIFICATE 48
2.04 PAYMENT AND PERFORMANCE BONDS 48
2.05 ADDITIONAL BOND SECURITY 48
2.06 BUILDER'S RISK 48

PART 3 - TIME AND SCHEDULE 49
3.01 PROGRESS AND COMPLETION 49
3.02 CONSTRUCTION SCHEDULE 49
3.03 OWNER'S RIGHT TO SUSPEND THE WORK FOR CONVENIENCE 49
3.04 OWNER'S RIGHT TO STOP THE WORK FOR CAUSE 50
3.05 DELAY 50
3.06 NOTICE TO OWNER OF LABOR DISPUTES 51
3.07 DAMAGES FOR FAILURE TO ACHIEVE TIMELY COMPLETION 51

PART 4 - SPECIFICATIONS, DRAWINGS, AND OTHER DOCUMENTS 51
4.01 DISCREPANCIES AND CONTRACT DOCUMENT REVIEW 51
4.02 PROJECT RECORD 52
4.03 SHOP DRAWINGS 52
4.04 ORGANIZATION OF SPECIFICATIONS 53
4.05 OWNERSHIP AND USE OF DRAWINGS, SPECIFICATIONS, AND OTHER DOCUMENTS 53

PART 5 – PERFORMANCE 54
5.01 CONTRACTOR CONTROL AND SUPERVISION 54
5.02 PERMITS, FEES, AND NOTICES 54
5.03 PATENTS AND ROYALTIES 55
5.04 PREVAILING WAGES 55
5.05 HOURS OF LABOR 56
5.06 NON-DISCRIMINATION 56
5.07 SAFETY PRECAUTIONS 57
5.08 OPERATIONS, MATERIAL HANDLING, AND STORAGE AREAS 58
5.09 PRIOR NOTICE OF EXCAVATION 59
5.10 UNFORESEEN PHYSICAL CONDITIONS 59
5.11 PROTECTION OF EXISTING IMPROVEMENTS 59
5.12 LAYOUT OF WORK 59
5.13 MATERIAL AND EQUIPMENT 59
5.14 AVAILABILITY AND USE OF UTILITY SERVICES 60
5.15 TESTS AND INSPECTION 60
5.16 CORRECTION OF NONCONFORMING WORK 61
5.17 CLEAN UP 62
5.18 ACCESS TO WORK 62
5.20 SUBCONTRACTORS AND SUPPLIERS 62

5.21 WARRANTY OF CONSTRUCTION....63
5.22 INDEMNIFICATION....64
5.23 HAZARDOUS MATERIALS....64

PART 6 - PAYMENTS AND COMPLETION....64
6.01 CONTRACT SUM....64
6.02 SCHEDULE OF VALUES....64
6.03 APPLICATION FOR PAYMENT....64
6.04 PROGRESS PAYMENTS....65
6.05 PAYMENTS WITHHELD....66
6.06 RETAINAGE AND BOND CLAIM RIGHTS....66
6.07 SUBSTANTIAL COMPLETION....66
6.08 PRIOR OCCUPANCY....66
6.09 FINAL COMPLETION, ACCEPTANCE, AND PAYMENT....66

PART 7 – CHANGES....67
7.01 CHANGE IN THE WORK....67
7.02 CHANGE IN THE CONTRACT SUM....68
7.03 CHANGE IN THE CONTRACT TIME....71

PART 8 - CLAIMS AND DISPUTE RESOLUTION....73
8.01 CLAIMS PROCEDURE....73
8.02 ARBITRATION....74
8.03 CLAIMS AUDITS....74

PART 9 - TERMINATION OF THE WORK....75
9.01 TERMINATION BY OWNER FOR CAUSE....75
9.02 TERMINATION BY OWNER FOR CONVENIENCE....76

PART 10 - MISCELLANEOUS PROVISIONS....76
10.01 GOVERNING LAW....76
10.02 SUCCESSORS AND ASSIGNS....76
10.03 MEANING OF WORDS....77
10.04 RIGHTS AND REMEDIES....77
10.05 CONTRACTOR REGISTRATION....77
10.06 SUBCONTRACTOR RESPONSIBILITY....**Error! Bookmark not defined.**
10.07 TIME COMPUTATIONS....77
10.08 RECORDS RETENTION....77
10.09 THIRD-PARTY AGREEMENTS....77
10.10 ANTITRUST ASSIGNMENT....77

GENERAL CONDITIONS OF THE CONTRACT

PART 1 - GENERAL PROVISIONS

1.01 DEFINITIONS

A. "Application for Payment" means a written request submitted by Contractor to A/E for payment of Work completed in accordance with the Contract Documents and approved Schedule of Values, supported by such substantiating data as Owner or A/E may require.

B. "Architect," "Engineer," or "A/E" means a person or entity lawfully entitled to practice architecture or engineering, representing Owner within the limits of its delegated authority.

C. "Change Order" means a written instrument signed by Owner and Contractor stating their agreement upon all of the following: (1) a change in the Work; (2) the amount of the adjustment in the Contract Sum, if any, and (3) the extent of the adjustment in the Contract Time, if any.

D. "Claim" means Contractor's exclusive remedy for resolving disputes with Owner regarding the terms of a Change Order or a request for equitable adjustment, as more fully set forth in part 8.

E. “Contract Award Amount” is the sum of the Base Bid and any accepted Alternates.

F. "Contract Documents" means the Advertisement for Bids, Instructions for Bidders, completed Form of Proposal, General Conditions, Modifications to the General Conditions, Supplemental Conditions, Public Works Contract, other Special Forms, Drawings and Specifications, and all addenda and modifications thereof.

G. "Contract Sum" is the total amount payable by Owner to Contractor for performance of the Work in accordance with the Contract Documents.

H. "Contract Time" is the number of calendar days allotted in the Contract Documents for achieving Substantial Completion of the Work.

I. "Contractor" means the person or entity who has agreed with Owner to perform the Work in accordance with the Contract Documents.

J. "Drawings" are the graphic and pictorial portions of the Contract Documents showing the design, location, and dimensions of the Work, and may include plans, elevations, sections, details, schedules, and diagrams.

K. "Final Acceptance" means the written acceptance issued to Contractor by Owner after Contractor has completed the requirements of the Contract Documents.

L. "Final Completion" means that the Work is fully and finally completed in accordance with the Contract Documents.

M. "Force Majeure" means those acts entitling Contractor to request an equitable adjustment in the Contract Time, as more fully set forth in paragraph
3.05A.

N. "Notice" means a written notice which has been delivered in person to the individual or a member of the firm or entity or to an officer of the corporation for which it was intended or, if delivered or sent by registered or certified mail, to the last business address known to the party giving notice.

O. "Notice to Proceed" means a notice from Owner to Contractor that defines the date on which the Contract Time begins to run.

P. "Owner" means the William Shore Memorial Pool District or its authorized representative with the authority to enter into, administer, and/or terminate the Work in accordance with the Contract Documents and make related determinations and findings.

Q. "Person" means a corporation, partnership, business association of any kind, trust, company, or individual.

R. "Prior Occupancy" means Owner's use of all or parts of the Project before Substantial Completion.

S. "Progress Schedule" means a schedule of the Work, in a form satisfactory to Owner, as further set forth in section 3.02.

T. "Project" means the total construction of which the Work performed in accordance with the Contract Documents may be the whole or a part and which may include construction by Owner or by separate contractors.

U. "Project Manual" means the volume usually assembled for the Work which may include the bidding requirements, sample forms, and other Contract Documents.

V. "Project Record" means the separate set of Drawings and Specifications as further set forth in paragraph 4.02A.

W. "Schedule of Values" means a written breakdown allocating the total Contract Sum to each principle category of Work, in such detail as requested by Owner.

X. "Specifications" are that portion of the Contract Documents consisting of the written requirements for materials, equipment, construction systems, standards and workmanship for the Work, and performance of related services.

Y. "Subcontract" means a contract entered into by Subcontractor for the purpose of obtaining supplies, materials, equipment, or services of any kind for or in connection with the Work.
Z. "Subcontractor" means any person, other than Contractor, who agrees to furnish or furnishes any supplies, materials, equipment, or services of any kind in connection with the Work.

AA. "Substantial Completion" means that stage in the progress of the Work where Owner has full and unrestricted use and benefit of the facilities for the purposes intended, as more fully set forth in section 6.07.

AB. "Work" means the construction and services required by the Contract Documents, and includes, but is not limited to, labor, materials, supplies, equipment, services, permits, and the manufacture and fabrication of components, performed, furnished, or provided in accordance with the Contract Documents.

1.02 ORDER OF PRECEDENCE

Any conflict or inconsistency in the Contract Documents shall be resolved by giving the documents precedence in the following order.

1. Change Orders
2. Signed Public Works Contract
3. Supplemental Conditions.
4. Modifications to the General Conditions.
5. General Conditions.
6. Specifications--provisions in Division 1 shall take precedence over provisions of any other Division.
7. Drawings--in case of conflict within the Drawings, large scale drawings shall take precedence over small scale drawings.
8. Signed and Completed Form of Proposal.
9. Instructions to Bidders.
10. Advertisement for Bids.

1.03 EXECUTION AND INTENT

Contractor makes the following representations to Owner:

1. The Contract Sum is reasonable compensation for the Work and the Contract Time is adequate for the performance of the Work, as represented by the Contract Documents;
2. Contractor has carefully reviewed the Contract Documents, visited and examined the Project site, become familiar with the local conditions in which the Work is to be performed, and satisfied itself as to the nature, location, character, quality and quantity of the Work, the labor, materials, equipment, goods, supplies, work, services and other items to be furnished and all other requirements of the Contract Documents, as well as the surface and subsurface conditions and other matters that may be encountered at the Project site or affect performance of the Work or the cost or difficulty thereof;
3. Contractor is financially solvent, able to pay its debts as they mature, and possesses sufficient working capital to complete the Work and perform Contractor's obligations required by the Contract Documents; and
4. Contractor is able to furnish the plant, tools, materials, supplies, equipment and labor required to complete the Work and perform the obligations required by the Contract Documents and has sufficient experience and competence to do so.

PART 2 - INSURANCE AND BONDS

2.01 CONTRACTOR'S LIABILITY INSURANCE

Prior to commencement of the Work, Contractor shall obtain all the insurance required by the Contract Documents and provide evidence satisfactory to Owner that such insurance has been procured. Review of the Contractor's insurance by Owner shall not relieve or decrease the liability of Contractor. Companies writing the insurance to be obtained by this part shall be licensed to do business under Chapter 48 RCW or comply with the Surplus Lines Law of the State of Washington. Contractor shall include in its bid the cost of all insurance and bond costs required to complete the base bid work and accepted alternates. Insurance carriers providing insurance in accordance with the Contract Documents shall be acceptable to Owner, and its A.M. Best rating shall be indicated on the insurance certificates.

1. Contractor shall maintain the following insurance coverage during the Work and for one year after Final Acceptance. Contractor shall also maintain the following insurance coverage during the performance of any corrective Work required by section 5.17.
    a. General liability on the ISO 1986 New Occurrence Form or its equivalent which will include:
        i. Completed operations/products liability;
        ii. Explosion, collapse, and underground; and
        iii. Employer's liability coverage.
    b. Automobile liability
2. Contractor shall comply with the Washington State Industrial Insurance Act and, if applicable, the Federal Longshoremen's and Harbor Workers' Act and the Jones Act.

3. All insurance coverage's shall protect against claims for damages for personal and bodily injury or death, as well as claims for property damage, which may arise from operations in connection with the Work whether such operations are by Contractor or any Subcontractor.
4. All insurance coverage's shall be endorsed to include Owner as an additional named insured for Work performed in accordance with the Contract Documents, and all insurance certificates shall evidence the Owner as an additional insured. In addition, an endorsement to the Contractor's insurance policies must be submitted naming the William Shore Memorial Pool District as an additional insured.

2.02 COVERAGE LIMITS

The coverage limits shall be as follows:

1. Limits of Liability shall not be less than $1,000,000 Combined Single Limit for Bodily Injury and Property Damage (other than Automobile liability) Each Occurrence; Personal Injury and Advertising Liability Each Occurrence.
2. $2,000,000 Combined Single Limit Annual General Aggregate.
3. $2,000,000 Annual Aggregate for Products and Completed Operations Liability.
4. $1,000,000 Combined Single Limit for Automobile Bodily Injury and Property Damage Liability, Each Accident or Loss.

2.03 INSURANCE COVERAGE CERTIFICATE

Prior to commencement of the Work, Contractor shall furnish to Owner a completed certificate of insurance coverage and an additional insured endorsement. All insurance certificates shall name Owner's Project number and Project title. All insurance certificates shall specifically require 45 days prior notice to Owner of cancellation or any material change, except 30 days for surplus line insurance.

2.04 PAYMENT AND PERFORMANCE BONDS

For contracts exceeding $35,000 a Payment and Performance Bond for 100% of the Contract Sum, including all Change Orders and state sales tax, shall be furnished for the Work, and shall be in a form acceptable to the Owner. No payment or performance bond is required if the Contract Sum is $150,000 or less and Contractor agrees that Owner may, in lieu of the bond, retain 10% of the Contract Sum for the period allowed by RCW 39.08.010.

2.05 ADDITIONAL BOND SECURITY

Contractor shall promptly furnish additional security required to protect Owner and persons supplying labor or materials required by the Contract Documents if:

1. Owner has a reasonable objection to the surety; or
2. Any surety fails to furnish reports on its financial condition if requested by Owner.

2.06 BUILDER'S RISK

2.06.1 Contractor shall purchase and maintain property insurance in the amount of the Contract Sum including all Change Orders for the Work on a replacement cost basis until Substantial Completion. The insurance shall cover the interest of Owner, Contractor, and any Subcontractors, as their interests may appear.

2.06.2 Contractor property insurance shall be placed on an "all risk" basis and insure against the perils of fire and extended coverage and physical loss or damage including theft, vandalism, malicious mischief, collapse, false work, temporary buildings, debris removal including demolition occasioned by enforcement of any applicable legal requirements, and shall cover reasonable compensation for A/E's services and expenses required as a result of an insured loss.

2.06.3 Owner and Contractor waive all subrogation rights against each other, any Subcontractors, A/E, A/E's subconsultants, separate contractors described in section 5.20, if any, and any of their

subcontractors, for damages caused by fire or other perils to the extent covered by property insurance obtained pursuant to this section or other property insurance applicable to the Work, except such rights as they have to proceeds of such insurance held by Owner as fiduciary. The policies shall provide such waivers of subrogation by endorsement or otherwise. A waiver of subrogation shall be effective to a person or entity even though that person or entity would otherwise have a duty of indemnification, contractual or otherwise, did not pay the insurance premium directly or indirectly, and whether or not the person or entity had an insurable interest in the property damaged.

PART 3 - TIME AND SCHEDULE

3.01 PROGRESS AND COMPLETION

Contractor shall diligently prosecute the Work, with adequate forces, achieve Substantial Completion within the Contract Time, and achieve Final Completion within a reasonable period thereafter

3.02 CONSTRUCTION SCHEDULE

3.02.1 Unless otherwise provided in Division 1, Contractor shall, within 14 days after issuance of the Notice to Proceed, submit a preliminary Progress Schedule. The Progress Schedule shall show the sequence in which Contractor proposes to perform the Work, and the dates on which Contractor plans to start and finish major portions of the Work, including dates for shop drawings and other submittals, and for acquiring materials and equipment.

3.02.2 Unless otherwise provided in Division 1, the Progress Schedule shall be in the form of a bar chart, or a critical path method analysis, as specified by Owner. The preliminary Progress Schedule may be general, showing the major portions of the Work, with a more detailed Progress Schedule submitted as directed by Owner.

3.02.3 Owner shall return comments on the preliminary Progress Schedule to Contractor within 14 days of receipt. Review by Owner of Contractor's schedule does not constitute an approval or acceptance of Contractor's construction means, methods, or sequencing, or its ability to complete the Work within the Contract Time. Contractor shall revise and resubmit its schedule, as necessary. Owner may withhold a portion of progress payments until a Progress Schedule has been submitted which meets the requirements of this section.

3.02.4 Contractor shall utilize and comply with the Progress Schedule. On a monthly basis, or as otherwise directed by Owner, Contractor shall submit an updated Progress Schedule at its own expense to Owner indicating actual progress. If, in the opinion of Owner, Contractor is not in conformance with the Progress Schedule for reasons other than acts of Force Majeure as identified in section 3.05, Contractor shall take such steps as are necessary to bring the actual completion dates of its work activities into conformance with the Progress Schedule, or revise the Progress Schedule to reconcile with the actual progress of the Work.

3.02.5 Contractor shall promptly notify Owner in writing of any actual or anticipated event which is delaying or could delay achievement of any milestone or performance of any critical path activity of the Work. Contractor shall indicate the expected duration of the delay, the anticipated effect of the delay on the Progress Schedule, and the action being or to be taken to correct the problem. Provision of such notice does not relieve Contractor of its obligation to complete the Work within the Contract Time.

3.03 OWNER'S RIGHT TO SUSPEND THE WORK FOR CONVENIENCE

3.03.1 Owner may, at its sole discretion, order Contractor, in writing, to suspend all or any part of the Work for up to 90 days, or for such longer period as mutually agreed.

3.03.2 Upon receipt of a written notice suspending the Work, Contractor shall immediately comply with its terms and take all reasonable steps to minimize the incurrence of cost of performance directly attributable

to such suspension. Within a period up to 90 days after the notice is delivered to Contractor, or within any extension of that period to which the parties shall have agreed, Owner shall either:

1. Cancel the written notice suspending the Work; or
2. Terminate the Work covered by the notice as provided in the termination provisions of part 9.

3.03.3 If a written notice suspending the Work is cancelled or the period of the notice or any extension thereof expires, Contractor shall resume Work.

3.03.4 Contractor shall be entitled to an equitable adjustment in the Contract Time, or Contract Sum, or both, for increases in the time or cost of performance directly attributable to such suspension, provided Contractor complies with all requirements set forth in part 7.

3.04 OWNER'S RIGHT TO STOP THE WORK FOR CAUSE

3.04.1 If Contractor fails or refuses to perform its obligations in accordance with the Contract Documents, Owner may order Contractor, in writing, to stop the Work, or any portion thereof, until satisfactory corrective action has been taken.

3.04.2 Contractor shall not be entitled to an equitable adjustment in the Contract Time or Contract Sum for any increased cost or time of performance attributable to Contractor's failure or refusal to perform or from any reasonable remedial action taken by Owner based upon such failure.

3.05 DELAY

3.05.1 Any delay in or failure of performance by Owner or Contractor, other than the payment of money, shall not constitute a default hereunder if and to the extent the cause for such delay or failure of performance was unforeseeable and beyond the control of the party ("Force Majeure"). Acts of Force Majeure include, but are not limited to:

1. Acts of God or the public enemy;
2. Acts or omissions of any government entity;
3. Fire or other casualty for which Contractor is not responsible;
4. Quarantine or epidemic;
5. Strike or defensive lockout;
6. Unusually severe weather conditions which could not have been reasonably anticipated; and
7. Unusual delay in receipt of supplies or products which were ordered and expedited and for which no substitute reasonably acceptable to Owner was available.

3.05.2 Contractor shall be entitled to an equitable adjustment in the Contract Time for changes in the time of performance directly attributable to an act of Force Majeure, provided it makes a request for equitable adjustment according to section 7.03. Contractor shall not be entitled to an adjustment in the Contract Sum resulting from an act of Force Majeure.

3.05.3 Contractor shall be entitled to an equitable adjustment in Contract Time, and may be entitled to an equitable adjustment in Contract Sum, if the cost or time of Contractor's performance is changed due to the fault or negligence of Owner, provided the Contractor makes a request according to sections 7.02 and 7.03.

3.05.4 Contractor shall not be entitled to an adjustment in Contract Time or in the Contract Sum for any delay or failure of performance to the extent such delay or failure was caused by Contractor or anyone for whose acts Contractor is responsible.

3.05.5 To the extent any delay or failure of performance was concurrently caused by the Owner and Contractor, Contractor shall be entitled to an adjustment in the Contract Time for that portion of the delay

or failure of performance that was concurrently caused, provided it makes a request for equitable adjustment according to section 7.03, but shall not be entitled to an adjustment in Contract Sum.

3.05.6 Contractor shall make all reasonable efforts to prevent and mitigate the effects of any delay, whether occasioned by an act of Force Majeure or otherwise.

3.06 NOTICE TO OWNER OF LABOR DISPUTES

3.06.1 If Contractor has knowledge that any actual or potential labor dispute is delaying or threatens to delay timely performance in accordance with the Contract Documents, Contractor shall immediately give notice, including all relevant information, to Owner.

3.0602 Contractor agrees to insert a provision in its Subcontracts and to require insertion in all sub-subcontracts, that in the event timely performance of any such contract is delayed or threatened by delay by any actual or potential labor dispute, the Subcontractor or Sub-subcontractor shall immediately notify the next higher tier Subcontractor or Contractor, as the case may be, of all relevant information concerning the dispute.

3.07 DAMAGES FOR FAILURE TO ACHIEVE TIMELY COMPLETION

3.07.1 Liquidated Damages

1. Timely performance and completion of the Work is essential to Owner and time limits stated in the Contract Documents are of the essence. Owner will incur serious and substantial damages if Substantial Completion of the Work does not occur within the Contract Time. However, it would be difficult if not impossible to determine the exact amount of such damages. Consequently, provisions for liquidated damages are included in the Contract Documents.
2. The liquidated damage amounts set forth in the Contract Documents will be assessed not as a penalty, but as liquidated damages for breach of the Contract Documents. This amount is fixed and agreed upon by and between the Contractor and Owner because of the impracticability and extreme difficulty of fixing and ascertaining the actual damages the Owner would in such event sustain. This amount shall be construed as the actual amount of damages sustained by the Owner, and may be retained by the Owner and deducted from periodic payments to the Contractor.
3. Assessment of liquidated damages shall not release Contractor from any further obligations or liabilities pursuant to the Contract Documents.

3.07.2 Actual Damages Actual damages will be assessed for failure to achieve Final Completion within the time provided. Actual damages will be calculated on the basis of direct architectural, administrative, and other related costs attributable to the Project from the date when Final Completion should have been achieved, based on the date Substantial Completion is actually achieved, to the date Final Completion is actually achieved. Owner may offset these costs against any payment due Contractor.

PART 4 - SPECIFICATIONS, DRAWINGS, AND OTHER DOCUMENTS

4.01 DISCREPANCIES AND CONTRACT DOCUMENT REVIEW

4.01.1 The intent of the Specifications and Drawings is to describe a complete Project to be constructed in accordance with the Contract Documents. Contractor shall furnish all labor, materials, equipment, tools, transportation, permits, and supplies, and perform the Work required in accordance with the Drawings, Specifications, and other provisions of the Contract Documents.

4.01.2 The Contract Documents are complementary. What is required by one part of the Contract Documents shall be binding as if required by all. Anything mentioned in the Specifications and not shown on the Drawings, or shown on the Drawings and not mentioned in the Specifications, shall be of like effect as if shown or mentioned in both.

4.01.3 Contractor shall carefully study and compare the Contract Documents with each other and with information furnished by Owner. If, during the performance of the Work, Contractor finds a conflict, error, inconsistency, or omission in the Contract Documents, it shall promptly and before proceeding with the Work affected thereby, report such conflict, error, inconsistency, or omission to A/E in writing.

4.01.4 Contractor shall do no Work without applicable Drawings, Specifications, or written modifications, or Shop Drawings where required, unless instructed to do so in writing by Owner. If Contractor performs any construction activity, and it knows or reasonably should have known that any of the Contract Documents contain a conflict, error, inconsistency, or omission, Contractor shall be responsible for the performance and shall bear the cost for its correction.

4.01.5 Contractor shall provide any work or materials the provision of which is clearly implied and is within the scope of the Contract Documents even if the Contract Documents do not mention them specifically.

4.01.6 Questions regarding interpretation of the requirements of the Contract Documents shall be referred to the A/E.

4.02 PROJECT RECORD

4.02.1 Contractor shall legibly mark in ink on a separate set of the Drawings and Specifications all actual construction, including depths of foundations, horizontal and vertical locations of internal and underground utilities and appurtenances referenced to permanent visible and accessible surface improvements, field changes of dimensions and details, actual suppliers, manufacturers and trade names, models of installed equipment, and Change Order proposals. This separate set of Drawings and Specifications shall be the "Project Record."

4.02.2 The Project Record shall be maintained on the project site throughout the construction and shall be clearly labeled "PROJECT RECORD". The Project Record shall be updated at least weekly noting all changes and shall be available to Owner at all times.

4.02.3 Contractor shall submit the completed and finalized Project Record to A/E prior to Final Acceptance.

4.03 SHOP DRAWINGS

4.03.1 "Shop Drawings" means documents and other information required to be submitted to A/E by Contractor pursuant to the Contract Documents, showing in detail: the proposed fabrication and assembly of structural elements; and the installation (i.e. form, fit, and attachment details) of materials and equipment. Shop Drawings include, but are not limited to, drawings, diagrams, layouts, schematics, descriptive literature, illustrations, schedules, performance and test data, samples, and similar materials furnished by Contractor to explain in detail specific portions of the Work required by the Contract Documents. For materials and equipment to be incorporated into the Work, Contractor submittal shall include the name of the manufacturer, the model number, and other information concerning the performance, capacity, nature, and rating of the item. When directed, Contractor shall submit all samples at its own expense. Owner may duplicate, use, and disclose Shop Drawings provided in accordance with the Contract Documents.

4.03.2 Contractor shall coordinate all Shop Drawings, and review them for accuracy, completeness, and compliance with the Contract Documents and shall indicate its approval thereon as evidence of such coordination and review. Where required by law, Shop Drawings shall be stamped by an appropriate professional licensed by the state of Washington. Shop Drawings submitted to A/E without evidence of Contractor's approval shall be returned for resubmission. Contractor shall review, approve, and submit Shop Drawings with reasonable promptness and in such sequence as to cause no delay in the Work or in the activities of Owner or separate contractors. Contractor's submittal schedule shall allow a reasonable

time for A/E review. A/E will review, approve, or take other appropriate action on the Shop Drawings. Contractor shall perform no portion of the Work requiring submittal and review of Shop Drawings until the respective submittal has been reviewed and the A/E has approved or taken other appropriate action. Owner and A/E shall respond to Shop Drawing submittals with reasonable promptness. Any Work by Contractor shall be in accordance with reviewed Shop Drawings. Submittals made by Contractor which are not required by the Contract Documents may be returned without action.

4.03.3 Approval, or other appropriate action with regard to Shop Drawings, by Owner or A/E shall not relieve Contractor of responsibility for any errors or omissions in such Shop Drawings, nor from responsibility for compliance with the requirements of the Contract Documents. Unless specified in the Contract Documents, review by Owner or A/E shall not constitute an approval of the safety precautions employed by Contractor during construction, or constitute an approval of Contractor's means or methods of construction. If Contractor fails to obtain approval before installation and the item or work is subsequently rejected, Contractor shall be responsible for all costs of correction.

4.03.4 If Shop Drawings show variations from the requirements of the Contract Documents, Contractor shall describe such variations in writing, separate from the Shop Drawings, at the time it submits the Shop Drawings containing such variations. If A/E approves any such variation, an appropriate Change Order will be issued. If the variation is minor and does not involve an adjustment in the Contract Sum or Contract Time, a Change Order need not be issued; however, the modification shall be recorded upon the Project Record.

4.03.5 Unless otherwise provided in Division I, Contractor shall submit to A/E for approval 5 copies of all Shop Drawings. Unless otherwise indicated, 3 sets of all Shop Drawings shall be retained by A/E and 2 sets shall be returned to Contractor.

4.04 ORGANIZATION OF SPECIFICATIONS

Specifications are prepared in sections which conform generally with trade practices. These sections are for Owner and Contractor convenience and shall not control Contractor in dividing the Work among the Subcontractors or in establishing the extent of the Work to be performed by any trade.

4.05 OWNERSHIP AND USE OF DRAWINGS, SPECIFICATIONS, AND OTHER DOCUMENTS

4.05.1 The Drawings, Specifications, and other documents prepared by A/E are instruments of A/E's service through which the Work to be executed by Contractor is described. Neither Contractor nor any Subcontractor shall own or claim a copyright in the Drawings, Specifications, and other documents prepared by A/E, and A/E shall be deemed the author of them and will, along with any rights of Owner, retain all common law, statutory, and other reserved rights, in addition to the copyright. All copies of these documents, except Contractor's set, shall be returned or suitably accounted for to A/E, on request, upon completion of the Work.

4.05.2 The Drawings, Specifications, and other documents prepared by the A/E, and copies thereof furnished to Contractor, are for use solely with respect to this Project. They are not to be used by Contractor or any Subcontractor on other projects or for additions to this Project outside the scope of the Work without the specific written consent of Owner and A/E. Contractor and Subcontractors are granted a limited license to use and reproduce applicable portions of the Drawings, Specifications, and other documents prepared by A/E appropriate to and for use in the execution of their Work.

4.05.3 Contractor and all Subcontractors grant a nonexclusive license to Owner, without additional cost or royalty, to use for its own purposes (including reproduction) all Shop Drawings, together with the information and diagrams contained therein, prepared by Contractor or any Subcontractor. In providing Shop Drawings, Contractor and all Subcontractors warrant that they have authority to grant to Owner a license to use the Shop Drawings, and that such license is not in violation of any copyright or other

intellectual property right. Contractor agrees to defend and indemnify Owner pursuant to the indemnity provisions in section 5.23 from any violations of copyright or other intellectual property rights arising out of Owner's use of the Shop Drawings hereunder, or to secure for Owner, at Contractor's own cost, licenses in conformity with this section.

4.05.4 The Shop Drawings and other submittals prepared by Contractor, Subcontractors of any tier, or its or their equipment or material suppliers, and copies thereof furnished to Contractor, are for use solely with respect to this Project. They are not to be used by Contractor or any Subcontractor of any tier, or material or equipment supplier, on other projects or for additions to this Project outside the scope of the Work without the specific written consent of Owner. The Contractor, Subcontractors of any tier, and material or equipment suppliers are granted a limited license to use and reproduce applicable portions of the Shop Drawings and other submittals appropriate to and for use in the execution of their Work under the Contract Documents.

PART 5 – PERFORMANCE

5.01 CONTRACTOR CONTROL AND SUPERVISION

5.01.1 Contractor shall supervise and direct the Work, using its best skill and attention, and shall perform the Work in a skillful manner. Contractor shall be solely responsible for and have control over construction means, methods, techniques, sequences, and procedures and for coordinating all portions of the Work, unless the Contract Documents give other specific instructions concerning these matters. Contractor shall disclose its means and methods of construction when requested by Owner.

5.01.2 Performance of the Work shall be directly supervised by a competent superintendent who is satisfactory to Owner and has authority to act for Contractor. The superintendent shall not be changed without the prior written consent of Owner.

5.01.3 Contractor shall be responsible to Owner for acts and omissions of Contractor, Subcontractors, and their employees and agents.

5.01.4 Contractor shall enforce strict discipline and good order among Contractor's employees and other persons performing the Work. Contractor shall not permit employment of persons not skilled in tasks assigned to them. Contractor's employees shall at all times conduct business in a manner which assures fair, equal, and nondiscriminatory treatment of all persons. Owner may, by written notice, request Contractor to remove from the Work or Project site any employee Owner reasonably deems incompetent, careless, or otherwise objectionable.

5.01.5 Contractor shall keep on the Project site a copy of the Drawings, Specifications, addenda, reviewed Shop Drawings, and permits and permit drawings.

5.01.6 Contractor shall ensure that its owner(s) and employees, and those of its Subcontractors, comply with the Ethics in Public Service Act RCW 42.52, which, among other things, prohibits state employees from having an economic interest in any public works contract that was made by, or supervised by, that employee. Contractor shall remove, at its sole cost and expense, any of its, or its Subcontractors', employees, if they are in violation of this act. While the Owner’s employees are not state employees, the Owner has adopted for this Project the ethics provisions of Chapter 42.52 RCW.

5.02 PERMITS, FEES, AND NOTICES

5.02.1 Unless otherwise provided in the Contract Documents, Contractor shall pay for and obtain all permits, licenses, and inspections necessary for proper execution and completion of the Work. Prior to Final Acceptance, the approved, signed permits shall be delivered to Owner.

5.02.2 If allowances for permits or utility fees are called for in the Contract Documents and set forth in Contractor's bid, and the actual costs of those permits or fees differ from the allowances in the Contract Documents, the difference shall be adjusted by Change Order.

5.02.3 Contractor shall comply with and give notices required by all federal, state, and local laws, ordinances, rules, regulations, and lawful orders of public authorities applicable to performance of the Work.

5.03 PATENTS AND ROYALTIES

Contractor is responsible for, and shall pay, all royalties and license fees. Contractor shall defend, indemnify, and hold Owner harmless from any costs, expenses, and liabilities arising out of the infringement by Contractor of any patent, copyright, or other intellectual property right used in the Work; however, provided that Contractor gives prompt notice, Contractor shall not be responsible for such defense or indemnity when a particular design, process, or product of a particular manufacturer or manufacturers is required by the Contract Documents. If Contractor has reason to believe that use of the required design, process, or product constitutes an infringement of a patent or copyright, it shall promptly notify Owner of such potential infringement.

5.04 PREVAILING WAGES

5.04.1 Contractor shall pay at least the prevailing rate of wages to all workers, laborers, or mechanics employed in the performance of any part of the Work in accordance with RCW 39.12 and the rules and regulations of the Department of Labor and Industries. The Contractor is also responsible for the payment of prevailing wages to workers, laborers, or mechanics of all subcontractors, of any tier. The schedule of prevailing wage rates for the locality or localities of the Work, is determined by the Industrial Statistician of the Department of Labor and Industries. It is the Contractor's responsibility to verify the applicable prevailing wage rate.

5.04.2 Before payment is made by the Owner to the Contractor for any work performed by the Contractor and subcontractors whose work is included in the application for payment, the Contractor shall submit, or shall have previously submitted to the Owner for the Project, a Statement of Intent to Pay Prevailing Wages, approved by the Department of Labor and Industries, certifying the rate of hourly wage paid and to be paid each classification of laborers, workers, or mechanics employed upon the Work by Contractor and Subcontractors. Such rates of hourly wage shall not be less than the prevailing wage rate.

5.04.3 Prior to release of retainage, the Contractor shall submit to the Owner an Affidavit of Wages Paid, approved by the Department of Labor and Industries, for the Contractor and every subcontractor, of any tier, that performed work on the Project.

5.04.3 Disputes regarding prevailing wage rates shall be referred for arbitration to the Director of the Department of Labor and Industries. The arbitration decision shall be final and conclusive and binding on all parties involved in the dispute as provided for by RCW 39.12.060.

5.04.4 Each Application for Payment Request submitted by Contractor shall include a statement that prevailing wages have been paid in accordance with the prefiled statement(s) of intent, as approved. Copies of the approved intent statement(s) shall be posted on the job site with a Contract amount over $10,000 with the address and telephone number of the Industrial Statistician of the Department of Labor and Industries where a complaint or inquiry concerning prevailing wages may be made.

5.04.5 In compliance with chapter 296-127 WAC, Contractor shall pay to the Department of Labor and Industries the currently established fee(s) for each statement of intent and/or affidavit of wages paid submitted to the Department of Labor and Industries for certification.

5.04.6 Consistent with WAC 296-127-320, the Contractor and any subcontractor shall submit a certified copy of payroll records if requested.

5.04.7 The State of Washington prevailing wage rates applicable for this public works project, which is located in Clallam County, may be found at the following website address of the Washington State Department of Labor and Industries: https://fortress.wa.gov/lni/wagelookup/prvWagelookup.aspx. Based on the bid submittal deadline for this project, the applicable effective date for prevailing wages for this project is the bid submittal date. A copy of the applicable prevailing wage rates are also available for viewing at the office of the Owner, located at 225 E. 5th Street, Port Angeles, Washington 98362. Upon request, the Owner will mail a hard copy of the applicable prevailing wages for this project.

5.05 HOURS OF LABOR

5.05.1 Contractor shall comply with all applicable provisions of RCW 49.28 and they are incorporated herein by reference. Pursuant to that statute, no laborer, worker, or mechanic employed by Contractor, any Subcontractor, or any other person performing or contracting to do the whole or any part of the Work, shall be permitted or required to work more than eight hours in any one calendar day, provided, that in cases of extraordinary emergency, such as danger to life or property, the hours of work may be extended, but in such cases the rate of pay for time employed in excess of eight hours of each calendar day shall be not less than one and one-half times the rate allowed for this same amount of time during eight hours' service.

5.05.2 Notwithstanding the preceding paragraph, RCW 49.28 permits a contractor or subcontractor in any public works contract subject to those provisions, to enter into an agreement with its employees in which the employees work up to ten hours in a calendar day. No such agreement may provide that the employees work ten-hour days for more than four calendar days a week. Any such agreement is subject to approval by the employees. The overtime provisions of RCW 49.28 shall not apply to the hours, up to forty hours per week, worked pursuant to any such agreement.

5.06 NON-DISCRIMINATION

5.06.1 Discrimination in all phases of employment is prohibited by, among other laws and regulations, Title VII of the Civil Rights Act of 1964, the Vietnam Era Veterans Readjustment Act of 1974, sections 503 and 504 of the Vocational Rehabilitation Act of 1973, the Equal Employment Act of 1972, the Age Discrimination Act of 1967, the Americans with Disabilities Act of 1990, the Civil Rights Act of 1991, Presidential Executive Order 11246, Executive Order 11375, the Washington State Law Against Discrimination, RCW 49.60, and Gubernatorial Executive Order 85-09. These laws and regulations establish minimum requirements for affirmative action and fair employment practices which Contractor must meet.

5.06.2 During performance of the Work:

1. Contractor shall not discriminate against any employee or applicant for employment because of race, creed, color, national origin, sex, age, marital status, or the presence of any physical, sensory, or mental disability, Vietnam era veteran status, or disabled veteran status, nor commit any other unfair practices as defined in RCW 49.60.
2. Contractor shall, in all solicitations or advertisements for employees placed by or for it, state that all qualified applicants will be considered for employment, without regard to race, creed, color, national origin, sex, age, marital status, or the presence of any physical, sensory, or mental disability.
3. Contractor shall send to each labor union, employment agency, or representative of workers with which it has a collective bargaining agreement or other contract or understanding, a notice advising the labor union, employment agency, or workers' representative of Contractor's obligations according to the Contract Documents and RCW 49.60.
4. Contractor shall permit access to its books, records, and accounts, and to its premises by Owner, and by the Washington State Human Rights Commission, for the purpose of investigation to ascertain compliance with this section of the Contract Documents.
5. Contractor shall include the provisions of this section in every Subcontract.

5.07 SAFETY PRECAUTIONS

5.07.1 Contractor shall be responsible for initiating, maintaining, and supervising all safety precautions and programs in connection with the performance of the work.

5.07.2 In carrying out its responsibilities according to the Contract Documents, Contractor shall protect the lives and health of employees performing the Work and other persons who may be affected by the Work; prevent damage to materials, supplies, and equipment whether on site or stored off-site; and prevent damage to other property at the site or adjacent thereto. Contractor shall comply with all applicable laws, ordinances, rules, regulations, and orders of any public body having jurisdiction for the safety of persons or property or to protect them from damage, injury, or loss; shall erect and maintain all necessary safeguards for such safety and protection; and shall notify owners of adjacent property and utilities when prosecution of the Work may affect them.

5.07.3 Contractor shall maintain an accurate record of exposure data on all incidents relating to the Work resulting in death, traumatic injury, occupational disease, or damage to property, materials, supplies, or equipment. Contractor shall immediately report any such incident to Owner. Owner shall, at all times, have a right of access to all records of exposure.

5.07.4 Contractor shall provide all persons working on the Project site with information and training on hazardous chemicals in their work at the time of their initial assignment, and whenever a new hazard is introduced into their work area.

1. Information. At a minimum, Contractor shall inform persons working on the Project site of:
    a. The requirements of chapter 296-62 WAC, General Occupational Health Standards;
    b. Any operations in their work area where hazardous chemicals are present; and
    c. The location and availability of written hazard communication programs, including the required list(s) of hazardous chemicals and material safety data sheets required by chapter 296-62 WAC.
2. Training. At a minimum, Contractor shall provide training for persons working on the Project site which includes:
    a. Methods and observations that may be used to detect the presence or release of a hazardous chemical in the work area (such as monitoring conducted by the employer, continuous monitoring devices, visual appearance or odor of hazardous chemicals when being released, etc.)
    b. The physical and health hazards of the chemicals in the work area;
    c. The measures such persons can take to protect themselves from these hazards, including specific procedures Contractor, or its Subcontractors, or others have implemented to protect those on the Project site from exposure to hazardous chemicals, such as appropriate work practices, emergency procedures, and personal protective equipment to be used; and
    d. The details of the hazard communications program developed by Contractor, or its Subcontractors, including an explanation of the labeling system and the material safety data sheet, and how employees can obtain and use the appropriate hazard information.

5.07.5 Contractor's responsibility for hazardous, toxic, or harmful substances shall include the following duties:

1. Contractor shall not keep, use, dispose, transport, generate, or sell on or about the Project site, any substances now or hereafter designated as, or which are subject to regulation as, hazardous, toxic, dangerous, or harmful by any federal, state or local law, regulation, statute or ordinance (hereinafter collectively referred to as "hazardous substances", in violation of any such law, regulation, statute, or ordinance, but in no case shall any such hazardous substance be stored more than 90 days on the Project site.

2. Contractor shall promptly notify Owner of all spills or releases of any hazardous substances which are otherwise required to be reported to any regulatory agency and pay the cost of cleanup. Contractor shall promptly notify Owner of all failures to comply with any federal, state, or local law, regulation, or ordinance; all inspections of the Project site by any regulatory entity concerning the same; all regulatory orders or fines; and all responses or interim cleanup actions taken by or proposed to be taken by any government entity or private party on the Project site.

5.07.6 All Work shall be performed with due regard for the safety of the public. Contractor shall perform the Work so as to cause a minimum of interruption of vehicular traffic or inconvenience to pedestrians. All arrangements to care for such traffic shall be Contractor's responsibilities. All expenses involved in the maintenance of traffic by way of detours shall be borne by Contractor.

5.07.7 In an emergency affecting the safety of life or the Work or of adjoining property, Contractor is permitted to act, at its discretion, to prevent such threatened loss or injury, and Contractor shall so act if so authorized or instructed.

5.07.8 Nothing provided in this section shall be construed as imposing any duty upon Owner or A/E with regard to, or as constituting any express or implied assumption of control or responsibility over, Project site safety, or over any other safety conditions relating to employees or agents of Contractor or any of its Subcontractors, or the public.

5.08 OPERATIONS, MATERIAL HANDLING, AND STORAGE AREAS

5.08.1 Contractor shall confine all operations, including storage of materials, to Owner-approved areas.

5.08.2 Temporary buildings (e.g., storage sheds, shops, offices) and utilities may be provided by Contractor only with the consent of Owner and without expense to Owner. The temporary buildings and utilities shall remain the property of Contractor and shall be removed by Contractor at its expense upon completion of the Work.

5.08.3 Contractor shall use only established roadways or temporary roadways authorized by Owner. When materials are transported in prosecuting the Work, vehicles shall not be loaded beyond the loading capacity recommended by the manufacturer of the vehicle or prescribed by federal, state, or local law or regulation.

5.08.4 Ownership and control of all materials or facility components to be demolished or removed from the Project site by Contractor shall immediately vest in Contractor upon severance of the component from the facility or severance of the material from the Project site. Contractor shall be responsible for compliance with all laws governing the storage and ultimate disposal. Contractor shall provide Owner with a copy of all manifests and receipts evidencing proper disposal when required by Owner or applicable law

5.08.5 Contractor shall be responsible for the proper care and protection of its materials and equipment delivered to the Project site. Materials and equipment may be stored on the premises subject to approval of Owner. When Contractor uses any portion of the Project site as a shop, Contractor shall be responsible for any repairs, patching, or cleaning arising from such use.

5.08.6 Contractor shall protect and be responsible for any damage or loss to the Work, or to the materials or equipment until the date of Substantial Completion, and shall repair or replace without cost to Owner any damage or loss that may occur, except damages or loss caused by the acts or omissions of Owner. Contractor shall also protect and be responsible for any damage or loss to the Work, or to the materials or equipment, after the date of Substantial Completion, and shall repair or replace without cost to Owner any such damage or loss that might occur, to the extent such damages or loss are caused by the acts or omissions of Contractor, or any Subcontractor.

5.09 PRIOR NOTICE OF EXCAVATION

"Excavation" means an operation in which earth, rock, or other material on or below the ground is moved or otherwise displaced by any means, except the tilling of soil less than 12 inches in depth for agricultural purposes, or road ditch maintenance that does not change the original road grade or ditch flow line. Before commencing any excavation, Contractor shall provide notice of the scheduled commencement of excavation to all owners of underground facilities or utilities, through locator services.

5.10 UNFORESEEN PHYSICAL CONDITIONS

5.10.1 If Contractor encounters conditions at the site which are subsurface or otherwise concealed physical conditions which differ materially from those indicated in the Contract Documents, or unknown physical conditions of an unusual nature which differ materially from those ordinarily found to exist and generally recognized as inherent in construction activities of the character provided for in the Contract Documents, then Contractor shall give written notice to Owner promptly and in no event later than 7 days after the first observance of the conditions. Conditions shall not be disturbed prior to such notice.

5.10.2 If such conditions differ materially and cause a change in Contractor's cost of, or time required for, performance of any part of the Work, the Contractor may be entitled to an equitable adjustment in the Contract Time or Contract Sum, or both, provided it makes a request therefor as provided in part 7.

5.11 PROTECTION OF EXISTING IMPROVEMENTS

5.11.1 Contractor shall protect from damage all existing structures, equipment, improvements, utilities, and vegetation: at or near the Project site; and on adjacent property of a third party, the locations of which are made known to or should be known by Contractor. Contractor shall repair any damage, including that to the property of a third party, resulting from failure to comply with the requirements of the Contract Documents or failure to exercise reasonable care in performing the Work. If Contractor fails or refuses to repair the damage promptly, Owner may have the necessary work performed and charge the cost to Contractor.
5.11.2 Contractor shall only remove trees when specifically authorized to do so, and shall protect vegetation that will remain in place.

5.12 LAYOUT OF WORK

5.12.1 Contractor shall plan and lay out the Work in advance of operations so as to coordinate all work without delay or revision.

5.12.2 Contractor shall lay out the Work from Owner established baselines and bench marks indicated on the Drawings, and shall be responsible for all field measurements in connection with the layout. Contractor shall furnish, at its own expense, all stakes, templates, platforms, equipment, tools, materials, and labor required to lay out any part of the Work. Contractor shall be responsible for executing the Work to the lines and grades that may be established. Contractor shall be responsible for maintaining or restoring all stakes and other marks established.

5.13 MATERIAL AND EQUIPMENT

5.13.1 All equipment, material, and articles incorporated into the Work shall be new and of the most suitable grade for the purpose intended, unless otherwise specifically provided in the Contract Documents. References in the Specifications to equipment, material, articles, or patented processes by trade name, make, or catalog number, shall be regarded as establishing a standard quality and shall not be construed as limiting competition. Contractor may, at its option, use any equipment, material, article, or process that, in the judgment of A/E, is equal to that named in the specifications, unless otherwise specifically provided in the Contract Documents.

5.13.2 Contractor shall do all cutting, fitting, or patching that may be required to make its several parts fit together properly, or receive or be received by work of others set forth in, or reasonably implied by, the Contract Documents. Contractor shall not endanger any work by cutting, excavating, or otherwise altering the Work and shall not cut or alter the work of any other contractor unless approved in advance by Owner.

5.13.3 Should any of the Work be found defective, or in any way not in accordance with the Contract Documents, this work, in whatever stage of completion, may be rejected by Owner.

5.14 AVAILABILITY AND USE OF UTILITY SERVICES

5.14.1 Owner shall make all reasonable utilities available to Contractor from existing outlets and supplies, as specified in the Contract Documents. Unless otherwise provided in the Contract Documents, the utility service consumed shall be charged to or paid for by Contractor at prevailing rates charged to Owner or, where the utility is produced by Owner, at reasonable rates determined by Owner. Contractor will carefully conserve any utilities furnished.

5.14.2 Contractor shall, at its expense and in a skillful manner satisfactory to Owner, install and maintain all necessary temporary connections and distribution lines, together with appropriate protective devices, and all meters required to measure the amount of each utility used for the purpose of determining charges. Prior to the date of Final Acceptance, Contractor shall remove all temporary connections, distribution lines, meters, and associated equipment and materials.

5.15 TESTS AND INSPECTION

5.15.1 Contractor shall maintain an adequate testing and inspection program and perform such tests and inspections as are necessary or required to ensure that the Work conforms to the requirements of the Contract Documents. Contractor shall be responsible for inspection and quality surveillance of all its Work and all Work performed by any Subcontractor. Unless otherwise provided, Contractor shall make arrangements for such tests, inspections, and approvals with an independent testing laboratory or entity acceptable to Owner, or with the appropriate public authority, and shall bear all related costs of tests, inspections, and approvals. Contractor shall give Owner timely notice of when and where tests and inspections are to be made. Contractor shall maintain complete inspection records and make them available to Owner.

5.15.2 Owner may, at any reasonable time, conduct such inspections and tests as it deems necessary to ensure that the Work is in accordance with the Contract Documents. Owner shall promptly notify Contractor if an inspection or test reveals that the Work is not in accordance with the Contract Documents. Unless the subject items are expressly accepted by Owner, such Owner inspection and tests are for the sole benefit of Owner and do not:

1. Constitute or imply acceptance;
2. Relieve Contractor of responsibility for providing adequate quality control measures;
3. Relieve Contractor of responsibility for risk of loss or damage to the Work, materials, or equipment;
4. Relieve Contractor of its responsibility to comply with the requirements of the Contract Documents; or
5. Impair Owner's right to reject defective or nonconforming items, or to avail itself of any other remedy to which it may be entitled.

5.15.3 Neither observations by an inspector retained by Owner, the presence or absence of such inspector on the site, nor inspections, tests, or approvals by others, shall relieve Contractor from any requirement of the Contract Documents, nor is any such inspector authorized to change any term or condition of the Contract Documents.

5.15.4 Contractor shall promptly furnish, without additional charge, all facilities, labor, material and equipment reasonably needed for performing such safe and convenient inspections and tests as may be

required by Owner. Owner may charge Contractor any additional cost of inspection or testing when Work is not ready at the time specified by Contractor for inspection or testing, or when prior rejection makes reinspection or retest necessary. Owner shall perform its inspections and tests in a manner that will cause no undue delay in the Work.

5.16 CORRECTION OF NONCONFORMING WORK

5.16.1 If a portion of the Work is covered contrary to the requirements in the Contract Documents, it must, if required in writing by Owner, be uncovered for Owner's observation and be replaced at the Contractor's expense and without change in the Contract Time.

5.16.2 If, at any time prior to Final Completion, Owner desires to examine the Work, or any portion of it, which has been covered, Owner may request to see such Work and it shall be uncovered by Contractor. If such Work is in accordance with the Contract Documents, the Contractor shall be entitled to an adjustment in the Contract Sum for the costs of uncovering and replacement, and, if completion of the Work is thereby delayed, an adjustment in the Contract Time, provided it makes a request therefor as provided in part 7. If such Work is not in accordance with the Contract Documents, the Contractor shall pay the costs of examination and reconstruction.

5.16.3 Contractor shall promptly correct Work found by Owner not to conform to the requirements of the Contract Documents, whether observed before or after Substantial Completion and whether or not fabricated, installed, or completed. Contractor shall bear all costs of correcting such nonconforming Work, including additional testing and inspections.

5.16.4 If, within one year after the date of Substantial Completion of the Work or designated portion thereof, or within one year after the date for commencement of any system warranties established under section 6.08, or within the terms of any applicable special warranty required by the Contract Documents, any of the Work is found to be not in accordance with the requirements of the Contract Documents, Contractor shall correct it promptly after receipt of written notice from Owner to do so. Owner shall give such notice promptly after discovery of the condition. This period of one year shall be extended, with respect to portions of Work first performed after Substantial Completion, by the period of time between Substantial Completion and the actual performance of the Work. Contractor's duty to correct with respect to Work repaired or replaced shall run for one year from the date of repair or replacement. Obligations under this paragraph shall survive Final Acceptance.

5.16.5 Contractor shall remove from the Project site portions of the Work which are not in accordance with the requirements of the Contract Documents and are neither corrected by Contractor nor accepted by Owner.

5.16.6 If Contractor fails to correct nonconforming Work within a reasonable time after written notice to do so, Owner may replace, correct, or remove the nonconforming Work and charge the cost thereof to the Contractor.

5.16.7 Contractor shall bear the cost of correcting destroyed or damaged Work, whether completed or partially completed, caused by Contractor's correction or removal of Work which is not in accordance with the requirements of the Contract Documents.

5.16.8 Nothing contained in this section shall be construed to establish a period of limitation with respect to other obligations which Contractor might have according to the Contract Documents. Establishment of the time period of one year as described in paragraph 5.16.4 relates only to the specific obligation of Contractor to correct the Work, and has no relationship to the time within which the Contractor's obligation to comply with the Contract Documents may be sought to be enforced, including the time within which such proceedings may be commenced.

5.16.9 If Owner prefers to accept Work which is not in accordance with the requirements of the Contract Documents, Owner may do so instead of requiring its removal and correction, in which case the Contract Sum may be reduced as appropriate and equitable.

5.17 CLEAN UP

Contractor shall at all times keep the Project site, including hauling routes, infrastructures, utilities, and storage areas, free from accumulations of waste materials. Before completing the Work, Contractor shall remove from the premises its rubbish, tools, scaffolding, equipment, and materials. Upon completing the Work, Contractor shall leave the Project site in a clean, neat, and orderly condition satisfactory to Owner. If Contractor fails to clean up as provided herein, and after reasonable notice from Owner, Owner may do so and the cost thereof shall be charged to Contractor.

5.18 ACCESS TO WORK

Contractor shall provide Owner and A/E access to the Work in progress wherever located.

5.19 OTHER CONTRACTS

Owner may undertake or award other contracts for additional work at or near the Project site. Contractor shall reasonably cooperate with the other contractors and with Owner's employees and shall carefully adapt scheduling and perform the Work in accordance with these Contract Documents to reasonably accommodate the other work.

5.20 SUBCONTRACTORS AND SUPPLIERS

5.20.1 Before submitting the first Application for Payment, Contractor shall furnish in writing to Owner the names, addresses, and telephone numbers of all Subcontractors, as well as suppliers providing materials in excess of $2,500. Contractor shall utilize Subcontractors and suppliers which are experienced and qualified, and meet the requirements of the Contract Documents, if any. Contractor shall not utilize any Subcontractor or supplier to whom the Owner has a reasonable objection, and shall obtain Owner's written consent before making any substitutions or additions.

5.20.2 All Subcontracts must be in writing. By appropriate written agreement, Contractor shall require each Subcontractor, so far as applicable to the Work to be performed by the Subcontractor, to be bound to Contractor by terms of the Contract Documents, and to assume toward Contractor all the obligations and responsibilities which Contractor assumes toward Owner in accordance with the Contract Documents. Each Subcontract shall preserve and protect the rights of Owner in accordance with the Contract Documents with respect to the Work to be performed by the Subcontractor so that subcontracting thereof will not prejudice such rights. Where appropriate, Contractor shall require each Subcontractor to enter into similar agreements with Sub-subcontractors. However, nothing in this paragraph shall be construed to alter the contractual relations between Contractor and its Subcontractors with respect to insurance or bonds.

5.20.3 Contractor shall schedule, supervise, and coordinate the operations of all Subcontractors. No Subcontracting of any of the Work shall relieve Contractor from its responsibility for the performance of the Work in accordance with the Contract Documents or any other obligations of the Contract Documents.

5.20.4 At the time of subcontract execution, the Contractor shall verify that each of its first tier subcontractors meets the following bidder responsibility criteria:

A. Have a current certificate of registration in compliance with chapter 18.27 RCW, which must have been in effect at the time of subcontract bid submittal;

B. Have a current Washington Unified Business Identifier (UBI) number;

C. If applicable, have:
   a. Have Industrial Insurance (workers' compensation) coverage for the subcontractor's employees working in Washington, as required in Title 51 RCW;

   b. A Washington Employment Security Department number, as required in Title 50 RCW;

   c. A Washington Department of Revenue state excise tax registration number, as required in Title 82 RCW;

   d. An electrical contractor license, if required by Chapter 19.28 RCW;

   e. An elevator contractor license, if required by Chapter 70.87 RCW.

E. Not be disqualified from bidding on any public works contract under RCW 39.06.010 or 39.12.065 (3).

E. Within the three-year period immediately preceding the date of the proposal solicitation, not have been determined by a final and binding citation and notice of assessment issued by the department of labor and industries or through a civil judgment entered by a court of limited or general jurisdiction to have willfully violated, as defined in RCW 49.48.082, any provision of chapter 49.46, 49.48, or 49.52 RCW.

5.20.5 The Contractor shall include the above language of this section in each of its first tier subcontracts, and shall require each of its subcontractors to include the same language of this section in each of their subcontracts, adjusting only as necessary the terms used for the contracting parties. Upon request of the Owner, the Contractor shall promptly provide documentation to the Owner demonstrating that the subcontractor meets the subcontractor responsibility criteria below. The requirements of this section apply to all subcontractors regardless of tier.

5.20.6 Each subcontract agreement for a portion of the Work is hereby assigned by Contractor to Owner provided that:
1. The assignment is effective only after termination by Owner for cause pursuant to section 9.01 and only for those Subcontracts which Owner accepts by notifying the Subcontractor in writing; and
2. After the assignment is effective, Owner will assume all future duties and obligations toward the Subcontractor which Contractor assumed in the Subcontract.
3. The assignment is subject to the prior rights of the surety, if any, obligated under any bond provided in accordance with the Contract Documents.

5.21 WARRANTY OF CONSTRUCTION

5.21.1 In addition to any special warranties provided elsewhere in the Contract Documents, Contractor warrants that all Work conforms to the requirements of the Contract Documents and is free of any defect in equipment, material, or design furnished, or workmanship performed, by Contractor.

5.21.2 With respect to all warranties, express or implied, for Work performed or materials furnished according to the Contract Documents, Contractor shall:
1. Obtain all warranties that would be given in normal commercial practice;
2. Require all warranties to be executed, in writing, for the benefit of Owner;
3. Enforce all warranties for the benefit of Owner, if directed by Owner; and
4. Be responsible to enforce any subcontractor's, manufacturer's, or supplier's warranty should they extend beyond the period specified in the Contract Documents.

5.21.3 The obligations under this section shall survive Final Acceptance.

5.22 INDEMNIFICATION

5.22.1 Contractor shall defend, indemnify, and hold Owner and A/E harmless from and against all claims, demands, losses, damages, or costs, including but not limited to damages arising out of bodily injury or death to persons and damage to property, caused by or resulting from:

1. The sole negligence of Contractor or any of its Subcontractors;
2. The concurrent negligence of Contractor, or any Subcontractor, but only to the extent of the negligence of Contractor or such Subcontractor; and
3. The use of any design, process, or equipment which constitutes an infringement of any United States patent presently issued, or violates any other proprietary interest, including copyright, trademark, and trade secret.

5.22.2 In any action against Owner and any other entity indemnified in accordance with this section, by any employee of Contractor, its Subcontractors, Subsubcontractors, agents, or anyone directly or indirectly employed by any of them, the indemnification obligation of this section shall not be limited by a limit on the amount or type of damages, compensation, or benefits payable by or for Contractor or any Subcontractor under RCW Title 51, the Industrial Insurance Act, or any other employee benefit acts. In addition, Contractor waives immunity as to Owner and A/E only, in accordance with RCW Title 51.

5.23 HAZARDOUS MATERIALS

5.23.1 The Contractor shall exchange Hazardous Materials information to prevent injury or illness to District or Contractor personnel, to comply with WISHA WAC 296-62-054.

5.23.2 The Port has available to the Contractor the following:

1) A list of all known Hazardous Materials in use at the District. Information on each can be obtained by reviewing the Material Safety Data Sheets (MSDS).
2) Precautions to be taken to lessen the possibility of exposure.

5.23.3 The Contractor will:

1) Notify all subcontractors and/or suppliers of any Hazardous Materials the District may have on site.
2) Have available the MSDS for any Hazardous Materials brought on site

PART 6 - PAYMENTS AND COMPLETION

6.01 CONTRACT SUM

Owner shall pay Contractor the Contract Sum for performance of the Work, in accordance with the Contract Documents. The Contract Sum shall include all taxes imposed by law and properly chargeable to the Project, including sales tax.

6.02 SCHEDULE OF VALUES

Before submitting its first Application for Payment, Contractor shall submit to Owner for approval a breakdown allocating the total Contract Sum to each principle category of work, in such detail as requested by Owner ("Schedule of Values"). The approved Schedule of Values shall include appropriate amounts for demobilization, record drawings, O&M manuals, and any other requirements for Project closeout, and shall be used by Owner as the basis for progress payments. Payment for Work shall be made only for and in accordance with those items included in the Schedule of Values.

6.03 APPLICATION FOR PAYMENT

6.03.1 At monthly intervals at least thirty days before the 10th or 25th day of each month, unless determined otherwise by Owner, Contractor shall submit to Owner an itemized Application for Payment for

Work completed in accordance with the Contract Documents and the approved Schedule of Values. Each application shall be supported by such substantiating data as Owner may require.

6.03.2 By submitting an Application for Payment, Contractor is certifying that all Subcontractors have been paid, less earned retainage in accordance with RCW 60.28.011, as their interests appeared in the last preceding certificate of payment (*Certificate of Payment and Material Form*). By submitting an Application for Payment, Contractor is recertifying that the representations set forth in section 1.03 are true and correct, to the best of Contractor's knowledge, as of the date of the Application for Payment.

6.03.3 At the time it submits an Application for Payment, Contractor shall analyze and reconcile, to the satisfaction of Owner, the actual progress of the Work with the Progress Schedule.

6.03.4 If authorized by Owner, the Application for Payment may include request for payment for material delivered to the Project site and suitably stored, or for completed preparatory work. Payment may similarly be requested for material stored off the Project site, provided Contractor complies with or furnishes satisfactory evidence of the following:

1. The material will be placed in a warehouse that is structurally sound, dry, lighted and suitable for the materials to be stored;
2. The warehouse is located within a 10-mile radius of the Project. Other locations may be utilized, if approved in writing, by Owner;
3. Only materials for the Project are stored within the warehouse (or a secure portion of a warehouse set aside for the Project);
4. Contractor furnishes Owner a certificate of insurance extending Contractor's insurance coverage for damage, fire, and theft to cover the full value of all materials stored, or in transit;
5. The warehouse (or secure portion thereof) is continuously under lock and key, and only Contractor's authorized personnel shall have access;
6. Owner shall at all times have the right of access in company of Contractor;
7. Contractor and its surety assume total responsibility for the stored materials; and
8. Contractor furnishes to Owner certified lists of materials stored, bills of lading, invoices, and other information as may be required, and shall also furnish notice to Owner when materials are moved from storage to the Project site.

6.04 PROGRESS PAYMENTS

6.04.1Owner shall make progress payments on the 10th or 25th of each calendar month, in the manner and within the time provided in the Contract Documents, in such amounts as Owner determines are properly due, after receipt of a properly executed Application for Payment. Owner shall notify Contractor in accordance with RCW 39.76 if the Application for Payment does not comply with the requirements of the Contract Documents.

6.04.2 Owner shall retain 5% of the amount of each progress payment until 45 days after Final Acceptance and receipt of all documents required by law or the Contract Documents, including, at Owner's request, consent of surety to release of the retainage. In accordance with RCW 60.28, Contractor may request that monies reserved be retained in a fund by Owner, deposited by Owner in a bank or savings and loan, or placed in escrow with a bank or trust company to be converted into bonds and securities to be held in escrow with interest to be paid to Contractor. Owner may permit Contractor to provide an appropriate bond in lieu of the retained funds.

6.04.3 Title to all Work and materials covered by a progress payment shall pass to Owner at the time of such payment free and clear of all liens, claims, security interests, and encumbrances. Passage of title shall not, however, relieve Contractor from any of its duties and responsibilities for the Work or materials, or waive any rights of Owner to insist on full compliance by Contractor with the Contract Documents.

6.04.4 Payments due and unpaid in accordance with the Contract Documents shall bear interest as specified in RCW 39.76.

6.05 PAYMENTS WITHHELD

6.05.1 Owner may withhold or, on account of subsequently discovered evidence, nullify the whole or part of any payment to such extent as may be necessary to protect Owner from loss or damage for reasons including but not limited to:

1. Work not in accordance with the Contract Documents;
2. Reasonable evidence that the Work required by the Contract Documents cannot be completed for the unpaid balance of the Contract Sum;
3. Work by Owner to correct defective Work or complete the Work in accordance with section 5.17;
4. Failure to perform in accordance with the Contract Documents; or
5. Cost or liability that may occur to Owner as the result of Contractor's fault or negligent acts or omissions.

6.05.2 In any case where part or all of a payment is going to be withheld for unsatisfactory performance, Owner shall notify Contractor in accordance with RCW 39.76.

6.06 RETAINAGE AND BOND CLAIM RIGHTS

RCW chapters 39.08 and 60.28, concerning the rights and responsibilities of Contractor and Owner with regard to the performance and payment bonds and retainage, are made a part of the Contract Documents by reference as though fully set forth herein.

6.07 SUBSTANTIAL COMPLETION

Substantial Completion is the stage in the progress of the Work (or portion thereof designated and approved by Owner) when the construction is sufficiently complete, in accordance with the Contract Documents, so Owner can fully occupy the Work (or the designated portion thereof) for the use for which it is intended. All Work other than incidental corrective or punch list work shall be completed. Substantial Completion shall not have been achieved if all systems and parts are not functional, if utilities are not connected and operating normally, if all required occupancy permits have not been issued, or if the Work is not accessible by normal vehicular and pedestrian traffic routes. The date Substantial Completion is achieved shall be established in writing by Owner. Contractor may request an early date of Substantial Completion which must be approved by Change Order. Owner's occupancy of the Work or designated portion thereof does not necessarily indicate that Substantial Completion has been achieved.

6.08 PRIOR OCCUPANCY

6.08.1 Owner may, upon written notice thereof to Contractor, take possession of or use any completed or partially completed portion of the Work ("Prior Occupancy") at any time prior to Substantial Completion. Unless otherwise agreed in writing, Prior Occupancy shall not: be deemed an acceptance of any portion of the Work; accelerate the time for any payment to Contractor; prejudice any rights of Owner provided by any insurance, bond, guaranty, or the Contract Documents; relieve Contractor of the risk of loss or any of the obligations established by the Contract Documents; establish a date for termination or partial termination of the assessment of liquidated damages; or constitute a waiver of claims.

6.08.2 Notwithstanding anything in the preceding paragraph, Owner shall be responsible for loss of or damage to the Work resulting from Prior Occupancy. Contractor's one year duty to repair and any system warranties shall begin on building systems activated and used by Owner as agreed in writing by Owner and Contractor.

6.09 FINAL COMPLETION, ACCEPTANCE, AND PAYMENT

6.09.1 Final Completion shall be achieved when the Work is fully and finally complete in accordance with the Contract Documents. The date Final Completion is achieved shall be established by Owner in writing.

6.09.2 Final Acceptance is the formal action of Owner acknowledging Final Completion. Prior to Final Acceptance, Contractor shall, in addition to all other requirements in the Contract Documents, submit to Owner a written notice of any outstanding disputes or claims between Contractor and any of its Subcontractors, including the amounts and other details thereof. Neither Final Acceptance, nor final payment, shall release Contractor or its sureties from any obligations of these Contract Documents or the Public Works Bond, or constitute a waiver of any claims by Owner arising from Contractor's failure to perform the Work in accordance with the Contract Documents.

6.09.3 Acceptance of final payment by Contractor, or any Subcontractor, shall constitute a waiver and release to Owner of all claims by Contractor, or any such Subcontractor, for an increase in the Contract Sum or the Contract Time, and for every act or omission of Owner relating to or arising out of the Work, except for those Claims made in accordance with the procedures, including the time limits, set forth in part 8.

PART 7 – CHANGES

7.01 CHANGE IN THE WORK

7.01.1 Owner may, at any time and without notice to Contractor's surety, order additions, deletions, revisions, or other changes in the Work. These changes in the Work shall be incorporated into the Contract Documents through the execution of Change Orders. If any change in the Work ordered by Owner causes an increase or decrease in the Contract Sum or the Contract Time, an equitable adjustment shall be made as provided in section 7.02 or 7.03, respectively, and such adjustment(s) shall be incorporated into a Change Order.

7.01.2 If Owner desires to order a change in the Work, it may request a written Change Order proposal from Contractor. Contractor shall submit a Change Order proposal within 14 days of the request from Owner, or within such other period as mutually agreed. Contractor's Change Order proposal shall be full compensation for implementing the proposed change in the Work, including any adjustment in the Contract Sum or Contract Time, and including compensation for all delays in connection with such change in the Work and for any expense or inconvenience, disruption of schedule, or loss of efficiency or productivity occasioned by the change in the Work.

7.01.3 Upon receipt of the Change Order proposal, or a request for equitable adjustment in the Contract Sum or Contract Time, or both, as provided in sections 7.02 and 7.03, Owner may accept or reject the proposal, request further documentation, or negotiate acceptable terms with Contractor. Pending agreement on the terms of the Change Order, Owner may direct Contractor to proceed immediately with the Change Order Work. Contractor shall not proceed with any change in the Work until it has obtained Owner's approval. All Work done pursuant to any Owner-directed change in the Work shall be executed in accordance with the Contract Documents.

7.01.4 If Owner and Contractor reach agreement on the terms of any change in the Work, including any adjustment in the Contract Sum or Contract Time, such agreement shall be incorporated in a Change Order. The Change Order shall constitute full payment and final settlement of all claims for time and for direct, indirect, and consequential costs, including costs of delays, inconvenience, disruption of schedule, or loss of efficiency or productivity, related to any Work either covered or affected by the Change Order, or related to the events giving rise to the request for equitable adjustment.

7.01.5 If Owner and Contractor are unable to reach agreement on the terms of any change in the Work, including any adjustment in the Contract Sum or Contract Time, Contractor may at any time in writing, request a final offer from Owner. Owner shall provide Contractor with its written response within 30 days of Contractor's request. Owner may also provide Contractor with a final offer at any time. If Contractor rejects Owner's final offer, or the parties are otherwise unable to reach agreement, Contractor's only remedy shall be to file a Claim as provided in part 8.

7.02 CHANGE IN THE CONTRACT SUM

7.02.01 General Application

1. The Contract Sum shall only be changed by a Change Order. Contractor shall include any request for a change in the Contract Sum in its Change Order proposal.
2. If the cost of Contractor's performance is changed due to the fault or negligence of Owner, or anyone for whose acts Owner is responsible, Contractor shall be entitled to make a request for an equitable adjustment in the Contract Sum in accordance with the following procedure. No change in the Contract Sum shall be allowed to the extent: Contractor's changed cost of performance is due to the fault or negligence of Contractor, or anyone for whose acts Contractor is responsible; the change is concurrently caused by Contractor and Owner; or the change is caused by an act of Force Majeure as defined in Section 3.05.
    a. A request for an equitable adjustment in the Contract Sum shall be based on written notice delivered to Owner within 7 days of the occurrence of the event giving rise to the request. For purposes of this part, "occurrence" means when Contractor knew, or in its diligent prosecution of the Work should have known, of the event giving rise to the request. If Contractor believes it is entitled to an adjustment in the Contract Sum, Contractor shall immediately notify Owner and begin to keep and maintain complete, accurate, and specific daily records. Contractor shall give Owner access to any such records and, if requested shall promptly furnish copies of such records to Owner.
    b. Contractor shall not be entitled to any adjustment in the Contract Sum for any occurrence of events or costs that occurred more than 7 days before Contractor's written notice to Owner. The written notice shall set forth, at a minimum, a description of: the event giving rise to the request for an equitable adjustment in the Contract Sum; the nature of the impacts to Contractor and its Subcontractors of any tier, if any; and to the extent possible the amount of the adjustment in Contract Sum requested. Failure to properly give such written notice shall constitute a waiver of Contractor's right to an equitable adjustment.
    c. Within 30 days of the occurrence of the event giving rise to the request, unless Owner agrees in writing to allow an additional period of time to ascertain more accurate data, Contractor shall supplement the written notice provided in accordance with subparagraph a. above with additional supporting data. Such additional data shall include, at a minimum: the amount of compensation requested, itemized in accordance with the procedure set forth herein; specific facts, circumstances, and analysis that confirms not only that Contractor suffered the damages claimed, but that the damages claimed were actually a result of the act, event, or condition complained of and that the Contract Documents provide entitlement to an equitable adjustment to Contractor for such act, event, or condition; and documentation sufficiently detailed to permit an informed analysis of the request by Owner. When the request for compensation relates to a delay, or other change in Contract Time, Contractor shall demonstrate the impact on the critical path, in accordance with section 7.03C. Failure to provide such additional information and documentation within the time allowed or within the format required shall constitute a waiver of Contractor's right to an equitable adjustment.
    d. Pending final resolution of any request made in accordance with this paragraph, unless otherwise agreed in writing, Contractor shall proceed diligently with performance of the Work. e. Any requests by Contractor for an equitable adjustment in the Contract Sum and in the Contract Time that arise out of the same event(s) shall be submitted together.
3. The value of any Work covered by a Change Order, or of any request for an equitable adjustment in the Contract Sum, shall be determined by one of the following methods:
    a. On the basis of a fixed price as determined in paragraph 7.02.2.
    b. By application of unit prices to the quantities of the items involved as determined in paragraph 7.02.3.
    c. On the basis of time and material as determined in paragraph 7.02.4.

4. When Owner has requested Contractor to submit a Change Order proposal, Owner may direct Contractor as to which method in subparagraph 3. above to use when submitting its proposal. Otherwise, Contractor shall determine the value of the Work, or of a request for an equitable adjustment, on the basis of the fixed price method.

7.02.2 Change Order Pricing -- Fixed Price

When the fixed price method is used to determine the value of any Work covered by a Change Order, or of a request for an equitable adjustment in the Contract Sum, the following procedures shall apply:

1. Contractor's Change Order proposal, or request for adjustment in the Contract Sum, shall be accompanied by a complete itemization of the costs, including labor, material, subcontractor costs, and overhead and profit. The costs shall be itemized in the manner set forth below, and shall be submitted on breakdown sheets in a form approved by Owner.
2. All costs shall be calculated based upon appropriate industry standard methods of calculating labor, material quantities, and equipment costs.
3. If any of Contractor's pricing assumptions are contingent upon anticipated actions of Owner, Contractor shall clearly state them in the proposal or request for an equitable adjustment.
4. The cost of any additive or deductive changes in the Work shall be calculated as set forth below, except that overhead and profit shall not be included on deductive changes in the Work. Where a change in the Work involves additive and deductive work by the same Contractor or Subcontractor, small tools, overhead, profit, bond and insurance markups will apply to the net difference.
5. If the total cost of the change in the Work or request for equitable adjustment does not exceed $1,000, Contractor shall not be required to submit a breakdown if the description of the change in the Work or request for equitable adjustment is sufficiently definitive for Owner to determine fair value.
6. If the total cost of the change in the Work or request for equitable adjustment is between $1,000 and $2,500, Contractor may submit a breakdown in the following level of detail if the description of the change in the Work or if the request for equitable adjustment is sufficiently definitive to permit the Owner to determine fair value:
    a. lump sum labor;
    b. lump sum material;
    c. lump sum equipment usage;
    d. overhead and profit as set forth below; and
    e. insurance and bond costs as set forth below.
7. Any request for adjustment of Contract Sum based upon the fixed price method shall include only the following items:
    a. Craft labor costs: These are the labor costs determined by multiplying the estimated or actual additional number of craft hours needed to perform the change in the Work by the hourly labor costs. Craft hours should cover direct labor, as well as indirect labor due to trade inefficiencies. The hourly costs shall be based on the following:
        i. Basic wages and benefits: Hourly rates and benefits as stated on the Department of Labor and Industries approved "statement of intent to pay prevailing wages." Direct supervision shall be a reasonable percentage not to exceed 15% of the cost of direct labor. No supervision markup shall be allowed for a working supervisor's hours.
        ii. Worker's insurance: Direct contributions to the state of Washington for industrial insurance; medical aid; and supplemental pension, by the class and rates established by the Department of Labor and Industries.
        iii. Federal insurance: Direct contributions required by the Federal Insurance Compensation Act; Federal Unemployment Tax Act; and the State Unemployment Compensation Act.

iv. Travel allowance: Travel allowance and/or subsistence, if applicable, not exceeding those allowances established by regional labor union agreements, which are itemized and identified separately.
v. Safety: Cost incurred due to the Washington Industrial Safety and Health Act, which shall be a reasonable percentage not to exceed 2% of the sum of the amounts calculated in (i), (ii), and (iii) above.

b. Material costs: This is an itemization of the quantity and cost of materials needed to perform the change in the Work. Material costs shall be developed first from actual known costs, second from supplier quotations or if these are not available, from standard industry pricing guides. Material costs shall consider all available discounts. Freight costs, express charges, or special delivery charges, shall be itemized.
c. Equipment costs: This is an itemization of the type of equipment and the estimated or actual length of time the construction equipment appropriate for the Work is or will be used on the change in the Work. Costs will be allowed for construction equipment only if used solely for the changed Work, or for additional rental costs actually incurred by the Contractor. Equipment charges shall be computed on the basis of actual invoice costs or if owned, from the current edition of one of the following sources:
    i. Associated General Contractors - Washington State Department of Transportation (AGC WSDOT) Equipment Rental Agreement; 1987 edition.
    ii. The state of Washington Utilities and Transportation Commission for trucks used on highways.
    iii. The National Electrical Contractors Association for equipment used on electrical work.
    iv. The Mechanical Contractors Association of America for equipment used on mechanical work. The Equipment Watch Rental Rate Blue Book shall be used as a basis for establishing rental rates of equipment not listed in the above sources. The maximum rate for standby equipment shall not exceed that shown in the AGC WSDOT Equipment Rental Agreement, 1987 edition.
d. Allowance for small tools, expendables & consumable supplies: Small tools consist of tools which cost $250 or less and are normally furnished by the performing contractor. The maximum rate for small tools shall not exceed the following:
    i. For Contractor, 3% of direct labor costs.
    ii. For Subcontractors, 5% of direct labor costs.

Expendables and consumable supplies directly associated with the change in Work must be itemized.

e. Subcontractor costs: This is defined as payments Contractor makes to Subcontractors for changed Work performed by Subcontractors of any tier. The Subcontractors' cost of Work shall be calculated and itemized in the same manner as prescribed herein for Contractor.
f. Allowance for overhead: This is defined as costs of any kind attributable to direct and indirect delay, acceleration, or impact, added to the total cost to Owner of any change in the Contract Sum but not to the cost of any change in the Contract Time for which contractor has been compensated pursuant to the conditions set forth in Section 7.03. This allowance shall compensate Contractor for all noncraft labor, temporary construction facilities, field engineering, schedule updating, as-built drawings, home office cost, B&O taxes, office engineering, estimating costs, additional overhead because of extended time, and any other cost incidental to the change in the Work. It shall be strictly limited in all cases to a reasonable amount.
g. Allowance for profit: This is an amount to be added to the cost of any change in contract sum, but not to the cost of change in Contract Time for which contractor has been compensated pursuant to the conditions set forth in section 7.03. It shall be limited to a reasonable amount.
h. Cost of change in insurance or bond premium: This is defined as:

i. Contractor's liability insurance: The cost of any changes in Contractor's liability insurance arising directly from execution of the Change Order; and
ii. Public works bond: The cost of the additional premium for Contractor's bond arising directly from the changed Work.

The costs of any change in insurance or bond premium shall be added after overhead and allowance for profit are calculated in accordance with subparagraph f. and g. above.

7.02.3 Change Order Pricing -- Unit Prices

1. Whenever Owner authorizes Contractor to perform Work on a unit-price basis, Owner's authorization shall clearly state:
    a. Scope of work to be performed;
    b. Type of reimbursement including preagreed rates for material quantities; and
    c. Cost limit of reimbursement.
2. Contractor shall:
    a. Cooperate with Owner and assist in monitoring the Work being performed. As requested by Owner, Contractor shall identify workers assigned to the Change Order Work and areas in which they are working;
    b. Leave access as appropriate for quantity measurement; and
    c. Not exceed any cost limit(s) without Owner's prior written approval.
3. Contractor shall submit costs in accordance with paragraph 7.02.2. and satisfy the following requirements:
    a. Unit prices shall include reimbursement for all direct and indirect costs of the Work, including overhead and profit, and bond and insurance costs; and
    b. Quantities must be supported by field measurement statements signed by Owner.

7.02.04 Change Order Pricing -- Time-and-Material Prices

1. Whenever Owner authorizes Contractor to perform Work on a time-and-material basis, Owner's authorization shall clearly state
    a. Scope of Work to be performed;
    b. Type of reimbursement including preagreed rates, if any, for material quantities or labor; and
    c. Cost limit of reimbursement.
2. Contractor shall:
    a. Cooperate with Owner and assist in monitoring the Work being performed. As requested by Owner, identify workers assigned to the Change Order Work and areas in which they are working;
    b. Identify on daily time sheets all labor performed in accordance with this authorization. Submit copies of daily time sheets within 2 working days for Owner's review;
    c. Leave access as appropriate for quantity measurement;
    d. Perform all Work in accordance with this section as efficiently as possible; and
    e. Not exceed any cost limit(s) without Owner's prior written approval.
3. Contractor shall submit costs in accordance with paragraph 7.02.2 and additional verification supported by: a. Labor detailed on daily time sheets; and b. Invoices for material.

7.03 CHANGE IN THE CONTRACT TIME

7.03.1 The Contract Time shall only be changed by a Change Order. Contractor shall include any request for a change in the Contract Time in its Change Order proposal.

7.03.2 If the time of Contractor's performance is changed due to an act of Force Majeure, or due to the fault or negligence of Owner or anyone for whose acts Owner is responsible, Contractor shall be entitled to make a request for an equitable adjustment in the Contract Time in accordance with the following procedure. No adjustment in the Contract Time shall be allowed to the extent Contractor's changed time of

performance is due to the fault or negligence of Contractor, or anyone for whose acts Contractor is responsible.

1. A request for an equitable adjustment in the Contract Time shall be based on written notice delivered within 7 days of the occurrence of the event giving rise to the request. If Contractor believes it is entitled to adjustment of Contract Time, Contractor shall immediately notify Owner and begin to keep and maintain complete, accurate, and specific daily records. Contractor shall give Owner access to any such record and if requested, shall promptly furnish copies of such record to Owner.
2. Contractor shall not be entitled to an adjustment in the Contract Time for any events that occurred more than 7 days before Contractor's written notice to Owner. The written notice shall set forth, at a minimum, a description of: the event giving rise to the request for an equitable adjustment in the Contract Time; the nature of the impacts to Contractor and its Subcontractors of any tier, if any; and to the extent possible the amount of the adjustment in Contract Time requested. Failure to properly give such written notice shall constitute a waiver of Contractor's right to an equitable adjustment.
3. Within 30 days of the occurrence of the event giving rise to the request, unless Owner agrees in writing to allow an additional period of time to ascertain more accurate data, Contractor shall supplement the written notice provided in accordance with subparagraph 7.03.2.2 with additional supporting data. Such additional data shall include, at a minimum: the amount of delay claimed, itemized in accordance with the procedure set forth herein; specific facts, circumstances, and analysis that confirms not only that Contractor suffered the delay claimed, but that the delay claimed was actually a result of the act, event, or condition complained of, and that the Contract Documents provide entitlement to an equitable adjustment in Contract Time for such act, event, or condition; and supporting documentation sufficiently detailed to permit an informed analysis of the request by Owner. Failure to provide such additional information and documentation within the time allowed or within the format required shall constitute a waiver of Contractor's right to an equitable adjustment.
4. Pending final resolution of any request in accordance with this paragraph, unless otherwise agreed in writing, Contractor shall proceed diligently with performance of the Work.

7.03.3 Any change in the Contract Time covered by a Change Order, or based on a request for an equitable adjustment in the Contract Time, shall be limited to the change in the critical path of Contractor's schedule attributable to the change of Work or event(s) giving rise to the request for equitable adjustment. Any Change Order proposal or request for an adjustment in the Contract Time shall demonstrate the impact on the critical path of the schedule. Contractor shall be responsible for showing clearly on the Progress Schedule that the change or event: had a specific impact on the critical path, and except in case of concurrent delay, was the sole cause of such impact; and could not have been avoided by resequencing of the Work or other reasonable alternatives. D. Contractor may request compensation for the cost of a change in Contract Time in accordance with this paragraph, 7.03.4, subject to the following conditions:

1. The change in Contract Time shall solely be caused by the fault or negligence of Owner or A/E;
2. Compensation under this paragraph is limited to changes in Contract Time for which Contractor is not entitled to be compensated under section 7.02;
3. Contractor shall follow the procedure set forth in paragraph 7.03.2;
4. Contractor shall establish the extent of the change in Contract Time in accordance with paragraph 7.03.3; and
5. The daily cost of any change in Contract Time shall be limited to the items below, less funds that may have been paid pursuant to a change in the Contract Sum that contributed to this change in Contract Time:
    a. cost of nonproductive field supervision or labor extended because of the delay;
    b. cost of weekly meetings or similar indirect activities extended because of the delay;
    c. cost of temporary facilities or equipment rental extended because of the delay;

d. cost of insurance extended because of the delay;
e. general and administrative overhead in an amount to be agreed upon, but not to exceed 3% of Contract Sum divided by the Contract Time for each day of the delay.

PART 8 - CLAIMS AND DISPUTE RESOLUTION

8.01 CLAIMS PROCEDURE

8.01.1 If the parties fail to reach agreement on the terms of any Change Order for Owner-directed Work as provided in section 7.01, or on the resolution of any request for an equitable adjustment in the Contract Sum as provided in section 7.02 or the Contract Time as provided in section 7.03, Contractor's only remedy shall be to file a Claim with Owner as provided in this section.

8.01.2 Contractor shall file its Claim within the earlier of: 120 days from Owner's final offer in accordance with either paragraph 7.01.5 or the date of Final Acceptance.

8.01.3 The Claim shall be deemed to cover all changes in cost and time (including direct, indirect, impact, and consequential) to which Contractor may be entitled. It shall be fully substantiated and documented. At a minimum, the Claim shall contain the following information:

1. A detailed factual statement of the Claim for additional compensation and time, if any, providing all necessary dates, locations, and items of Work affected by the Claim;
2. The date on which facts arose which gave rise to the Claim;
3. The name of each employee of Owner or A/E knowledgeable about the Claim;
4. The specific provisions of the Contract Documents which support the Claim;
5. The identification of any documents and the substance of any oral communications that support the Claim;
6. Copies of any identified documents, other than the Contract Documents, that support the Claim;
7. If an adjustment in the Contract Time is sought: the specific days and dates for which it is sought; the specific reasons Contractor believes an extension in the Contract Time should be granted; and Contractor's analysis of its Progress Schedule to demonstrate the reason for the extension in Contract Time;
8. If an adjustment in the Contract Sum is sought, the exact amount sought and a breakdown of that amount into the categories set forth in, and in the detail required by, section 7.02; and
9. A statement certifying, under penalty of perjury, that the Claim is made in good faith, that the supporting cost and pricing data are true and accurate to the best of Contractor's knowledge and belief, that the Claim is fully supported by the accompanying data, and that the amount requested accurately reflects the adjustment in the Contract Sum or Contract Time for which Contractor believes Owner is liable.

8.01.4 After Contractor has submitted a fully documented Claim that complies with all applicable provisions of parts 7 and 8, Owner shall respond, in writing, to Contractor as follows:

1. If the Claim amount is less than $50,000, with a decision within 60 days from the date the Claim is received; or
2. If the Claim amount is $50,000 or more, with a decision within 60 days from the date the Claim is received, or with notice to Contractor of the date by which it will render its decision. Owner will then respond with a written decision in such additional time.

8.01.5 To assist in the review of Contractor's Claim, Owner may visit the Project site, or request additional information, in order to fully evaluate the issues raised by the Claim. Contractor shall proceed with performance of the Work pending final resolution of any Claim. Owner's written decision as set forth above shall be final and conclusive as to all matters set forth in the Claim, unless Contractor follows the procedure set forth in section 8.02.

8.01.6 Any Claim of the Contractor against the Owner for damages, additional compensation, or additional time, shall be conclusively deemed to have been waived by the Contractor unless timely made in accordance with the requirements of this section.

8.02 ARBITRATION

8.02.1 If Contractor disagrees with Owner's decision rendered in accordance with paragraph 8.01.4 Contractor shall serve and file a lawsuit in an appropriate court within 120 days of Owner's decision. This requirement cannot be waived except by an explicit waiver signed by Owner. The failure to file a lawsuit within said 120-day period shall result in Owner's decision rendered in accordance with paragraph 8.01.4 being final and binding on Contractor and all of its Subcontractors.

8.02.2 At any time, either before or after a lawsuit has been commenced by Contractor in accordance with paragraph 8.02.1, Owner may require Contractor to participate in further mediation or arbitration, or both, in any forum or format as determined by Owner.

8.02.3 Claims between Owner and Contractor, Contractor and its Subcontractors, Contractor and A/E, and Owner and A/E shall, upon demand by Owner, be submitted in a single forum, or Owner may consolidate such Claims or join any of the above-named parties in the same forum."

8.03 CLAIMS AUDITS

8.03.1 All Claims filed against Owner shall be subject to audit at any time following the filing of the Claim. Failure of Contractor, or Subcontractors of any tier, to maintain and retain sufficient records to allow Owner to verify all or a portion of the Claim or to permit Owner access to the books and records of Contractor, or Subcontractors of any tier, shall constitute a waiver of the Claim and shall bar any recovery.

8.03.2 In support of Owner audit of any Claim, Contractor shall, upon request, promptly make available to Owner the following documents:

1. Daily time sheets and supervisor's daily reports;
2. Collective bargaining agreements;
3. Insurance, welfare, and benefits records;
4. Payroll registers;
5. Earnings records;
6. Payroll tax forms;
7. Material invoices, requisitions, and delivery confirmations;
8. Material cost distribution worksheet;
9. Equipment records (list of company equipment, rates, etc.);
10. Vendors', rental agencies', Subcontractors', and agents' invoices;
11. Contracts between Contractor and each of its Subcontractors, and all lower-tier Subcontractor contracts and supplier contracts;
12. Subcontractors' and agents' payment certificates;
13. Cancelled checks (payroll and vendors);
14. Job cost report, including monthly totals;
15. Job payroll ledger;
16. Planned resource loading schedules and summaries;
17. General ledger;
18. Cash disbursements journal;
19. Financial statements for all years reflecting the operations on the Work. In addition, the Owner may require, if it deems it appropriate, additional financial statements for 3 years preceding execution of the Work;
20. Depreciation records on all company equipment whether these records are maintained by the company involved, its accountant, or others;

21. If a source other than depreciation records is used to develop costs for Contractor's internal purposes in establishing the actual cost of owning and operating equipment, all such other source documents;
22. All nonprivileged documents which relate to each and every Claim together with all documents which support the amount of any adjustment in Contract Sum or Contract Time sought by each Claim;
23. Work sheets or software used to prepare the Claim establishing the cost components for items of the Claim including but not limited to labor, benefits and insurance, materials, equipment, Subcontractors, all documents which establish the time periods, individuals involved, the hours for the individuals, and the rates for the individuals; and
24. Work sheets, software, and all other documents used by Contractor to prepare its bid.

8.03.3The audit may be performed by employees of Owner or a representative of Owner. Contractor, and its Subcontractors, shall provide adequate facilities acceptable to Owner, for the audit during normal business hours. Contractor, and all Subcontractors, shall make a good faith effort to cooperate with Owner's auditors.

PART 9 - TERMINATION OF THE WORK

9.01 TERMINATION BY OWNER FOR CAUSE

9.01.1 Owner may, upon 7 days written notice to Contractor and to its surety, terminate (without prejudice to any right or remedy of Owner) the Work, or any part of it, for cause upon the occurrence of any one or more of the following events:

1. Contractor fails to prosecute the Work or any portion thereof with sufficient diligence to ensure Substantial Completion of the Work within the Contract Time;
2. Contractor is adjudged bankrupt, makes a general assignment for the benefit of its creditors, or a receiver is appointed on account of its insolvency;
3. Contractor fails in a material way to replace or correct Work not in conformance with the Contract Documents;
4. Contractor repeatedly fails to supply skilled workers or proper materials or equipment;
5. Contractor repeatedly fails to make prompt payment due to Subcontractors or for labor;
6. Contractor materially disregards or fails to comply with laws, ordinances, rules, regulations, or orders of any public authority having jurisdiction; or
7. Contractor is otherwise in material breach of any provision of the Contract Documents.

9.01.2 Upon termination, Owner may at its option:

1. Take possession of the Project site and take possession of or use all materials, equipment, tools, and construction equipment and machinery thereon owned by Contractor to maintain the orderly progress of, and to finish, the Work;
2. Accept assignment of subcontracts pursuant to section 5.21; and
3. Finish the Work by whatever other reasonable method it deems expedient.

9.01.3 Owner's rights and duties upon termination are subject to the prior rights and duties of the surety, if any, obligated under any bond provided in accordance with the Contract Documents.

9.01.4 When Owner terminates the Work in accordance with this section, Contractor shall take the actions set forth in paragraph 9.02.2, and shall not be entitled to receive further payment until the Work is accepted.

9.01.5 If the unpaid balance of the Contract Sum exceeds the cost of finishing the Work, including compensation for A/E's services and expenses made necessary thereby and any other extra costs or damages incurred by Owner in completing the Work, or as a result of Contractor's actions, such excess

shall be paid to Contractor. If such costs exceed the unpaid balance, Contractor shall pay the difference to Owner. These obligations for payment shall survive termination.

9.01.6 Termination of the Work in accordance with this section shall not relieve Contractor or its surety of any responsibilities for Work performed.

9.01.7 If Owner terminates Contractor for cause, and it is later determined that none of the circumstances set forth in paragraph 9.01.1 exist, then such termination shall be deemed a termination for convenience pursuant to section 9.02.

9.02 TERMINATION BY OWNER FOR CONVENIENCE

9.02.1 Owner may, upon written notice, terminate (without prejudice to any right or remedy of Owner) the Work, or any part of it, for the convenience of Owner.

9.02.2 Unless Owner directs otherwise, after receipt of a written notice of termination for either cause or convenience, Contractor shall promptly:

1. Stop performing Work on the date and as specified in the notice of termination;
2. Place no further orders or subcontracts for materials, equipment, services or facilities, except as may be necessary for completion of such portion of the Work as is not terminated;
3. Cancel all orders and subcontracts, upon terms acceptable to Owner, to the extent that they relate to the performance of Work terminated;
4. Assign to Owner all of the right, title, and interest of Contractor in all orders and subcontracts;
5. Take such action as may be necessary or as directed by Owner to preserve and protect the Work, Project site, and any other property related to this Project in the possession of Contractor in which Owner has an interest; and
6. Continue performance only to the extent not terminated.

9.02.3 If Owner terminates the Work or any portion thereof for convenience, Contractor shall be entitled to make a request for an equitable adjustment for its reasonable direct costs incurred prior to the effective date of the termination, plus a reasonable allowance for overhead and profit on Work performed prior to termination, plus the reasonable administrative costs of the termination, but shall not be entitled to any other costs or damages, whatsoever, provided however, the total sum payable upon termination shall not exceed the Contract Sum reduced by prior payments. Contractor shall be required to make its request in accordance with the provisions of part 7.

9.02.4 If Owner terminates the Work or any portion thereof for convenience, the Contract Time shall be adjusted as determined by Owner.

9.02.5 All rights and liabilities of the parties, arising under the contract or otherwise, and concerning defects, guarantees, or warranties relating to any articles or component parts furnished to the Owner by the Contractor under the contract.

PART 10 - MISCELLANEOUS PROVISIONS

10.01 GOVERNING LAW

The Contract Documents and the rights of the parties herein shall be governed by the laws of the state of Washington. Venue shall be in Clallam County, unless otherwise specified.

10.02 SUCCESSORS AND ASSIGNS

Owner and Contractor respectively bind themselves, their partners, successors, assigns, and legal representatives to the other party hereto and to partners, successors, assigns, and legal representatives of such other party in respect to covenants, agreements, and obligations contained in the Contract Documents. Neither party shall assign the Work without written consent of the other, except that

Contractor may assign the Work for security purposes, to a bank or lending institution authorized to do business in the state of Washington. If either party attempts to make such an assignment without such consent, that party shall nevertheless remain legally responsible for all obligations set forth in the Contract Documents.

10.03 MEANING OF WORDS

Unless otherwise stated in the Contract Documents, words which have well-known technical or construction industry meanings are used in the Contract Documents in accordance with such recognized meanings. Reference to standard specifications, manuals, or codes of any technical society, organization, or association, or to the code of any governmental authority, whether such reference be specific or by implication, shall be to the latest standard specification, manual, or code in effect on the date for submission of bids, except as may be otherwise specifically stated. Wherever in these Drawings and Specifications an article, device, or piece of equipment is referred to in the singular manner, such reference shall apply to as many such articles as are shown on the drawings, or required to complete the installation.

10.04 RIGHTS AND REMEDIES

No action or failure to act by Owner or A/E shall constitute a waiver of a right or duty afforded them under the Contract Documents, nor shall such action or failure to act constitute approval of an acquiescence in a breach therein, except as may be specifically agreed in writing.

10.05 CONTRACTOR REGISTRATION

Pursuant to RCW 39.06, Contractor shall be registered or licensed as required by the laws of the State of Washington, including but not limited to RCW 18.27.

10.07 TIME COMPUTATIONS

When computing any period of time, the day of the event from which the period of time begins shall not be counted. The last day is counted unless it falls on a weekend or legal holiday, in which event the period runs until the end of the next day that is not a weekend or holiday. When the period of time allowed is less than 7 days, intermediate Saturdays, Sundays, and legal holidays are excluded from the computation.

10.08 RECORDS RETENTION

The wage, payroll, and cost records of Contractor, and its Subcontractors, and all records subject to audit in accordance with section 8.03, shall be retained for a period of not less than 6 years after the date of Final Acceptance.

10.09 THIRD-PARTY AGREEMENTS

The Contract Documents shall not be construed to create a contractual relationship of any kind between: A/E and Contractor; Owner and any Subcontractor; or any persons other than Owner and Contractor.

10.10 ANTITRUST ASSIGNMENT

Owner and Contractor recognize that in actual economic practice, overcharges resulting from antitrust violations are in fact usually borne by the purchaser. Therefore, Contractor hereby assigns to Owner any and all claims for such overcharges as to goods, materials, and equipment purchased in connection with the Work performed in accordance with the Contract Documents, except as to overcharges which result from antitrust violations commencing after the Contract Sum is established and which are not passed on to Owner under a Change Order. Contractor shall put a similar clause in its Subcontracts, and require a similar clause in its sub-Subcontracts, such that all claims for such overcharges on the Work are passed to Owner by Contractor.

END OF GENERAL CONDITIONS OF CONTRACT

00 73 19 - Health and Safety Provisions

PART 1: GENERAL

1. Related Work Specified Elsewhere

A. The provisions and intent of the Contract, including the General Conditions, Supplementary Conditions, and General Requirements apply to this work as if specified in this section.

2. Description of Work

A. The work includes the requirements for health and safety provisions necessary for all work at the site for this project. Work at the site includes subsurface excavations below a depth of four feet, contaminated soil handling, storage, and transportation, and contaminated water collection and treatment.

B. Detailed information regarding about soil and water at the site is included in the reference documents. Known contaminants of potential concern include metals, petroleum hydrocarbons, polycyclic aromatic hydrocarbons, and dioxins/furans.

C. Failure on the part of the Contractor to follow its site-specific Health and Safety Plan(s) or to conduct work in an unsafe manner may result in suspension of the work by the District. The Contractor shall not be entitled to extra compensation for health and safety related suspensions, nor shall the Contract completion date be extended.

3. Applicable laws and Regulations

a. The Contractor shall perform all work in compliance with the applicable provisions of the Washington Industrial Safety and Health Act, as well as other applicable federal, state, and local laws, regulations, and permits. The Contractor is fully responsible for planning and executing all the Work under this Contract in a manner that meets the regulatory requirements of Chapter 296-843 of the Washington Administrative Code (WAC) for protecting the health and safety of workers and the public.

b. While performing the work, the Contractor may be subject to on-site inspections by regulatory inspectors from the Washington State Department of Labor and Industries, and other federal, state, or local agencies. If the Contractor is found to be in violation of pertinent regulations, the Contractor shall cease all work immediately, notify the District, and correct the violation. Standby time required to resolve such violation shall be at the Contractor's sole expense.

PART 2: PRODUCTS

1. Materials

a. The Contractor shall provide all health and safety equipment and supplies (e.g., shoring equipment, personal protective equipment, fencing, gas meters, first aid supplies, etc.) necessary to support the Contractor’s and subcontractors work.

b. All personnel shall be trained to operate the appropriate safety equipment that would be utilized during the course of their work. It is the responsibility of the Contractor’s Site Safety and Health Officer to ascertain that all safety equipment is being used appropriately.

c. All equipment and supplies shall be kept in proper working order.

d. Personal protective equipment shall be worn to minimize dermal contact with soil and groundwater.

e. Based on site data, use of modified Level D personal protective equipment is expected. The use of respirators is not anticipated, but may be required periodically for odorous conditions or in the event that an unexpected situation arises involving a high concentration of volatiles. Workers should be respirator certified.

f. Complete sets of personal protective equipment required for entry to the site shall be made available at all times by the Contractor to the District employees, project engineers, consultants and agency inspectors.

PART 3: EXECUTION

1. Prepare Health and Safety Plan

a. Prior to the start of any work, the Contractor shall prepare a site-specific Health and Safety Plan (HASP) which meets all the requirements of WAC 296-843-100 as well as other applicable local, state and federal laws, regulations, and permits for construction safety and hazardous waste operations and emergency response (HAZWOPER). A copy of the HASP shall be submitted to the District and any government agency performing a health and safety inspection.

b. Each organization with on-site workers is expected to prepare a HASP. The Contractor can submit one comprehensive HASP for all Contractor and subcontractor work, or subcontractors can prepare separate plans at no additional cost to the District.

2. Site Safety and Health Officer

a. The Contractor shall provide a person designated as the Site Safety and Health Officer, who is thoroughly trained in rescue procedures and the use of all necessary safety equipment, air monitoring equipment, and gas detectors. The person must be present at all times while work is being performed and conduct testing, as necessary.

b. The Site Safety and Health Officer shall be empowered with the delegated authority to order any person or worker on the project site to follow the construction and health and safety rules. Failure to observe these rules is sufficient cause for removal of the person or worker(s) from this project.

c. The Site Safety and Health Officer is responsible for determining the extent to which any safety equipment must be utilized, depending on conditions encountered at the site.

3. Implement Health and Safety Plan

a. The Contractor shall perform whatever work is necessary for safety and be solely and completely responsible for conditions of the job site, including safety of all persons (including employees of the Engineer, Engineer's Representative, and Contractor) and property during the contract period. This requirement applies continuously and is not limited to normal working hours.

b. The Contractor shall inform all persons entering the site, including Contractor employees, subcontractor employees, and visitors, of the potential danger associated with construction activities and contaminated media at the site. The Contractor shall maintain proof that all on-site persons have read the Site Health and Safety Plan and are aware of the site hazards.

c. The Contractor shall maintain at least one copy of the site-specific HASP(s) at the work site at all times.

d. The Engineer's review of the Contractor's submittals and performance does not include approval of the adequacy of the Contractor's Site Safety and Health Officer, the site-specific HASP, safety program or any safety measures taken in, on, or near the construction site.

e. On-site activities involving potential soil or water exposures must be performed by HAZWOPER-trained personnel with current certifications. These personnel must have cards in their possession verifying current training status, and must present the cards when requested by the District, the organization(s) conducting oversight, and/or regulatory officials.

f. A third-party organization will be conducting airborne dust monitoring during the project. The Contractor shall allow for the third-party organization to monitor the breathing zone of Contractor employees. The Contractor shall stop work or take additional dust control measures approved by the Project Engineer if the time-weighted average of a daily dust measurement exceeds the Airborne Dust Action Level in the IAWP.

g. The Contractor is solely responsible for all health and safety procedures and mitigation measures associated with asphyxiating (toxic) gases, explosive gases, and oxygen-deficiency conditions (e.g., confined space entry).

h. The Contractor shall conduct regular on-site health and safety meetings and include other on-site workers such as subcontractors, the organization(s) conducting oversight, and third party samplers. The Contractor shall also brief on-site visitors about pertinent health and safety matters.

i. Accidents causing death, injuries, or damage must be reported immediately to the Engineer in person or by telephone or messenger. In addition, promptly report in writing to the Engineer all accidents whatsoever arising out of, or in connection with, the performance of the work whether on, or adjacent to, the site, giving full details and statements of witnesses.

j. If a claim is made by anyone against the Contractor or any subcontractor on account of any accident, the Contractor shall promptly report the facts in writing within 24 hours after occurrence, to the Engineer, giving full details of the claim.

PART 4: MEASUREMENT AND PAYMENT

Refer to Specification Section 01 20 00 Measurement and Payment

END OF SECTION

TAB 2

DIVISION 01 – GENERAL REQUIREMENTS

01 11 00 - Summary of Work

PART 1 – GENERAL

1. PROJECT DESCRIPTION

A. The Work of the Contract Documents can be summarized as follows: Relocating the building located at 205 E. 5th St., Port Angeles, WA to a lot located at 233 E. 8th St. Port Angeles, WA. The new lot will need to be prepared to receive the building and the building will need to be prepared to be moved. Parking and landscaping at the new location will be required.

2. GENERAL INFORMATION

A. Title of Contract Documents:
   1) William Shore Memorial Pool District, Port Angeles, WA
      Project Name: Horizon Center Relocation Project
      Project Number: PW-2018-02

B. Owner and A/E Defined:
   1) Owner:
   William Shore Memorial Pool District
   225 E. 5th St.
   Port Angeles, Washington 98362
   2) Project Manager: Steven D. Burke
   E-mail: sburke@williamshorepool.org
   Direct: 360-460-3526
   Office: 360-417-9767
   3) A/E of Record: Zenovic and Associates, Inc.
   301 E 6th St #1, Port Angeles, WA 98362
   Phone: (360) 417-0501

C. The Owner, the A/E, and various consultants hereinafter or otherwise identified by the Owner shall be given access to the Work insofar as their interests are concerned.

D. Owner's Consultants: The consultants under contract with the Owner in preparation of the Contract Documents are:
   1) Structural: Zenovic and Associates
   2) Civil: Zenovic & Associates
   3) Geotech: Envirotech Consulting

3. SPECIAL CONDITIONS

A. Description of special conditions of the Work:
   1) **Parking:** Contractor parking can be on 5th St., 8th St., and within the property of the District. Parking shall not occur in designated parking areas for local businesses.
   2) **Noise restrictions:** Between the hours of 10:00 p.m. and 7:00 a.m., the Contractor shall not use, except with the express written permission of the Project Manager, any tool, appliance or equipment producing noise of sufficient volume to disturb the sleep or repose of occupants in the neighboring property.

4. PERMITS

A. Owner will obtain and pay for the cost of the Master Use Permit (MUP) and the Building Permit. Owner is not responsible for obtaining and paying for trade permits or building moving permits.
B. Contractor shall obtain and pay for trade permits such as Temporary Use Permits (Construction Trailers), electrical, and other trade permits, including those permits required by the Contract Documents.

1) The Contractor is responsible for including these costs in its bid price to the Owner.

C. Contractor shall obtain and pay for all other permits required by Authorities Having Jurisdiction such as street use permits, utility permits, and temporary occupancy permits.

PART 2 - PRODUCTS (Not Used)

PART 3 - EXECUTION (Not Used)

End of Section

01 23 00 - Alternates

PART 1 - GENERAL

1. SUMMARY

A. This Section specifies administrative and procedural requirements of “Alternates” in the contract bidding process.

B. Definition: An Alternate is work identified on the Bid Form for which the Bidder must submit a bid price. Alternates are for certain construction activities defined in the bidding requirements that may be added to or deducted from Base Bid amount and/or a corresponding change in either the amount of construction to be completed, or in the products, materials, equipment, systems or installation methods described in Contract Documents.

C. Coordination: The Contractor shall coordinate all related Work and modify or adjust adjacent Work as necessary to ensure that the Work affected by each accepted Alternate is complete and fully integrated into the Project.

1) Each Alternate bid shall include all miscellaneous devices, accessory objects and similar items incidental to or required for a complete installation whether or not mentioned as part of the Alternate.

D. Notification: Owner will notify Contractor of the status of each Alternate to indicate whether Alternates should be accepted, rejected or deferred for consideration at a later date. Contractor shall maintain a summary status log of all Alternates deferred for consideration at a later date, identifying the latest date for Owner to decide, and review at construction progress meetings.

E. Use of Alternates: Any Alternates awarded by the Owner will be included in the Contract Agreement

PART 2 - PRODUCTS (Not Used).

PART 3 - EXECUTION (Not Used)

END OF SECTION

01 25 00 - Substitution Procedures

PART I - GENERAL

1. SUMMARY

A. This Section specifies administrative and procedural requirements governing the Contractor's selection of products for use in the Work, and administrative procedures for handling requests for substitutions made after execution of the Contract Agreement. Substitution during the bidding phase is covered in *Division 00 21 13 - Bidder Instructions.*

2. DEFINITIONS

A. Definitions used in this Section are not intended to negate the meaning of other terms used in the Contract Documents.
   1) "Products" are items purchased for incorporation in the Work, regardless of whether they were specifically purchased for the Project or taken from previously purchased stock.
   2) Named Products" are products identified by use of the manufacturer's name for a product, including such items as a make or model designation, as recorded in the most recent published product literature as of the date of the Contract Agreement.
   3) "Materials" are products that must be cut, shaped, worked, mixed, finished, refined or otherwise fabricated, processed, or installed to form a part of the Work.
   4) "Equipment" is a product with operational parts, whether motorized or manually operated, and in particular, a product that requires service connections such as wiring or piping.
   5) "Substitution Request Form" form used for requesting substitutions and form is located in *Division 00 63 25.*

3. QUALITY ASSURANCE

A. Source Limitations: Provide products of same kind, to fullest extent possible, from a single source.
B. Compatibility of Options: When the Contractor is given the option of selecting between two or more products for use (on the Project) the product selected shall be compatible with products previously selected, even if previously selected products were also option.
C. Nameplates: Except for labels required by Authorities Having Jurisdiction (AHJ), do not attach or imprint manufacturer's or producer's nameplates, trademarks or operating data on surfaces exposed to view in occupied spaces or on the building exterior.
   1) Labels: Locate required product labels and stamps on a concealed surface, or where required by AHJ for observation after installation, on an accessible surface that is not conspicuous.

4. PRODUCT SELECTION

A. General Product Requirements: Unless otherwise indicated, provide products that comply with the Contract Documents and that are undamaged and unused at the time of installation.
   1) Provide products complete with all accessories, trim, finish, safety guards and other devices and with details needed for a complete installation for the intended use and effect.
   2) Where available, provide standard products of a type and manufacturer used successfully in similar situations on other projects.
B. Product Selection Procedures: Product selection is governed by the Contract Documents and governing regulations. Procedures governing product selection include the following:
   1) Performance Specifications: Performance specifications may be one of the following:
      a) One or more named reference(s) with no accompanying conditioning language such as "or approved equal" or "no substitutions"; or
      b) No named reference is specified, and requirements are specified by means of any of the following:
         (1) Descriptive requirements
         (2) Design requirements

(3) Performance requirements
(4) Regulatory requirements and/or industry standards

2) References to equipment, material, articles or patented processes by trade name, manufacturer, make or catalog number, are presumed to set a standard of quality so as to encourage competition. The term "equal" is presumed and need not be repeated in the Specifications. Where Specifications set a standard of quality, provide product options complying with or exceeding the provisions of the Contract Documents, and which are recommended by a manufacturer for the applications indicated. No Substitution Request is required. However, Owner may request, and Contractor shall provide, documentation of the manufacturer's recommendations for a particular product application.
3) Closed Proprietary Specifications: Products by one or more manufacturers are specified, and the specification section includes the term "no substitution(s)," "no other(s)," or "no exceptions." No other product options will be accepted. Provide products and work as specified.
4) Open Proprietary Specifications: Products by one or more manufacturers are specified, and the specification section includes the term "or approved equal," or "other acceptable." Submit the Substitution Request Form for other products to Owner under the provisions of this Section.
5) Visual Matching: Where matching an established sample is required, the Owner's decision will be final on whether a proposed product matches satisfactorily.
   a) Where there is no product available within the specified product category which matches satisfactorily and also complies with other specified requirements, the contractor shall comply with the provisions of the Contract Documents concerning substitutions for the selection of a matching product in another product category.
6) Visual Selection: Where specified product requirements include the phrase "...as selected from the manufacturer's standard colors, patterns, textures..." or similar phrases, select a product and manufacturer that complies with other specified requirements. Owner will select the color, patterns and texture from the product line selected.

5. PRODUCT SUBSTITUTION

A. General:
   1) No substitution request will be considered unless submitted in accordance with the requirements of this Section.
   2) If the Contractor desires approval of some material or product other than that specified by the Contract Documents, it must submit a written request for approval of the proposed substitute item to the Owner in accordance with the following requirements:
      a) All requests must be made on the Owner's Substitution Request Form (Division 00 63 25) or on a form or in a format acceptable to the Owner, and shall indicate one or more reasons why a product substitution is required.
      b) Substitution requests shall be prepared, transmitted, and processed in accordance with Section 01 33 00 "Submittal Procedures."
      c) All requests for a substitution originating with a Subcontractor shall be submitted by the Contractor after the Contractor's review of the Subcontractor's request.
   3) Final decision as to whether an item is an equal or acceptable substitution rests solely with the Owner.

B. Substitution Requests: Every substitution request must state whether the item offered is equal or superior to the specified product. The substitute material or product must be accompanied by its reference in the Contract Documents and complete catalog, technical and other information. If applicable, include samples showing comparison of physical and other pertinent characteristics as required to establish equivalence of acceptability for the proposed application. Where specific test results are required by the Contract Documents, the comparison data for the proposed item shall be based upon the same test methods as those specified, or they shall be correlated to clearly demonstrate comparability. The same warranty of the Work described for the specified product is required for the substitution.

C. Reasons for Substitutions: Substitution Requests will not be considered except for the following reasons, which must be substantiated by the Contractor:
   1) Unavailability: Specified item has been discontinued or is unavailable in time to meet Construction Schedule through no fault of the Contractor or Subcontractor.
   2) Unsuitability: Subsequent information discloses the specified item as unsuitable, inappropriate, or unable to perform properly or fit the designated space.
   3) Regulatory Requirements: A substitution is required to comply with code interpretations by AHJ or insurance regulations.
   4) Warranty: A manufacturer or fabricator declares the specified item to be unsuitable for the use intended or refuses to certify or warrant the performance of the specified item for the Project.
   5) Owner's Benefit: In the judgment of Contractor, acceptance of the proposed substitution is clearly in Owner's best interest because of cost, quality, or other consideration.

D. Coordination: In making a Substitution Request, the Contractor certifies that it will coordinate all Subcontractor work required by the substitution and waives all claims for additional costs and/or time which subsequently become apparent as a consequence of the substitution.

E. Re-design: At the Owner's sole discretion, the Contractor shall bear all Owner costs related to the substitution, including costs of A/E's services for investigation, evaluation and re-design, if necessary.

F. Owner will not consider:
   1) Substitutions, if they are indicated or implied on Shop Drawings or other Project data submittals;
   2) Substitutions which, if accepted, will require substantial revisions of Contract Documents, or
   3) Substitution Request Forms which do not provide adequate or clearly defined information for complete and timely appraisal.

PART 2 - PRODUCTS (Not Used)

PART 3 - EXECUTION (Not Used)

END OF SECTION

01 26 00 - Contract Modification Procedures

PART 1 - GENERAL

1) SUMMARY

A. This Section includes the administrative and procedural requirements for executing a change in the Work as herein specified and further described in the General Conditions. The Owner reserves the right to require use of the forms identified in this section, or to accept modified and simplified forms and formats to accomplish the same purposes,

2) PRELIMINARY REQUIREMENTS:

A. Prior to submitting Contractor's first Change Order Request (COR), or responding to the first Change Order Proposal (COP), the Contractor shall submit a breakdown of journeyman and apprentice wage rates using the Owner's COP Wage Rates form. The breakdown shall show:
   1) Basic wage rate (based on L&I Intent to Pay Prevailing Wages or union agreement);
   2) Fringe Package (based on L&I Intent to Pay Prevailing Wages or union agreement);
   3) FUI (Federal Unemployment Insurance);
   4) FICA (Federal Insurance Compensation Act);
   5) Medicare;
   6) SUI (State Unemployment Compensation Act);
   7) WC (Workers Compensation).

B. Contractor shall submit verification of the above rates, if requested by Owner.

C. Prior to submitting Contractor's first COR or responding to Owner's first COP that involves equipment owned by the Contractor, the Contractor shall submit a list of all equipment anticipated to be used on the Project. Contractor shall provide the hourly rate based on the Equipment Watch Rental Rate Blue Book and as modified by other sources as referenced in the General Conditions. The Contractor shall use the Owner's COP Equipment Rates form to compute the equipment rate.

3) CHANGE ORDER PROCEDURES

A. Owner Change Order Proposal (COP): Changes may be initiated by Owner through a Change Order Proposal form submitted to the Contractor. Such a request is for information and pricing only and is not an instruction to execute changes or to stop work in progress, unless issued as a Field Order.
   1) The COP will include:
      a) A detailed description of changes, products, and location of modification in Project and a statement as to whether overtime work is authorized; and,
      b) Supplementary or revised Drawings or Specifications.
   2) An updated Construction Progress Schedule may be requested if the COP impacts the existing Construction Progress Schedule.

B. Contractor Change Order Request (COR): The Contractor shall initiate changes by submitting a Change Order Request Form that is signed and dated to the Owner's Project Manager requesting a Change Order. The information on the COR form shall include:
   1) Description of proposed changes;
   2) Reason for making changes;
   3) A specific period of time during which requested price will be considered valid;
   4) Actions required by Owner;
   5) Effect on Contract Sum and Contract Time;
   6) Documentation consistent with the requirements of Part 7 of the General Conditions supporting any change in the Contract Sum or Contract Time, as appropriate;
   7) Statement of why proposed change is not covered in Contract Documents; and
   8) Date the Work is to be completed.

C. Field Order: In situations where time is of the essence or an emergency condition exists, the Owner's Project Manager may directly order a change to the Work by a written Field Order signed by Owner's Project Manager. Field Orders will only be issued on an agreed upon maximum not-to-exceed cost basis, either lump sum or time and materials.
D. Change Order Pricing:
   1) The cost of the change shall be marked-up in accordance with General Conditions. NO ADDITIONAL MARK-UPS SHALL BE ALLOWED.
   2) Contractor shall provide all backup pricing documentation for a change on the following forms (THESE FORMS SHALL ALSO BE THE ONLY ACCEPTABLE DOCUMENTATION FOR ALL SUBCONTRACTORS, unless otherwise agreed by the Owner.):
      a) COP Contractor Breakdown Summary
      b) COP Subcontractor Breakdown Summary
      c) COP Cost Breakdown
   3) Provide all other supporting documentation as required to substantiate the requested costs such as invoices for rental equipment and freight cost. Total cost and time shall be brought forward to the COP form and signed and dated by Contractor.
E. Change Order Authorization:
   1) A/E recommendation of COP acceptance is indicated by A/E's signature.
   2) Upon signature and execution by Owner, the Change Order Proposal becomes a Change Order altering the Contract Sum and/or Contract Time, as indicated.
   3) Contractor may only request payment for changes in the Work against an approved Change Order.
   4) If Owner disapproves the Change Order Proposal, the reason for disapproval will be stated. A request for a revised proposal or cancellation of the proposal will be shown and returned to Contractor.
F. Correlation with Contractor's Submittals:
   1) Application of Payment forms shall record each Change Order as a separate item of work (see *Section 01 29 76 "Progress Payment Procedures"*).
   2) Revise Construction Progress Schedule to reflect changes in Contract Time.
   3) Upon completion of Change Order work, record pertinent modifications in the Project Record documents.
G. Distribution:
   1. Upon authorization of a Change Order, Owner will transmit one (1) signed copy to Contractor.

PART 2 - PRODUCTS (Not Used)

PART 3 - EXECUTION (Not Used)

END OF SECTION

01 29 76 - Progress Payment Procedures

PART 1 – GENERAL

1. SUMMARY

A. This Section includes the administrative and procedural requirements for Contractor progress payment and release of retainage as herein specified and further described in Part 6 of the General Conditions (00 72 13). The Owner reserves the right to require use of the forms identified in this section, or to accept modified and simplified forms and formats to accomplish the same purposes,

2. PREREQUISITES FOR FIRST APPLICATION FOR PAYMENT

A. Prevailing Wage Forms: Submit Statement of Intent to Pay Prevailing Wages form, approved by the Department of Labor and Industries, prior to commencing the Work. The Owner will not make payment on an Application for Payment until the Contractor has filed with the Owner an approved copy of the form for the Contractor and every Subcontractor of every tier that performed work during the payment period and are included in an Application for Payment. The form shall list every classification of laborer, worker, or mechanic employed by the Contractor and Subcontractors. THERE ARE NO EXCEPTIONS TO THIS REQUIREMENT.

B. Schedule of Values: Before submitting the first Application for Payment, submit and receive approval of the Schedule of Values allocating the detail of the Total Contract Cost, in a breakdown acceptable to the Owner, which shall be documented on the Application for Payment. The approved Schedule of Values will be used by the Owner as the basis for progress payments. PAYMENT FOR WORK WILL ONLY BE MADE FOR, AND IN ACCORDANCE WITH, THOSE ITEMS INCLUDED IN THE APPROVED SCHEDULE OF VALUES.
   1) Format: On 8-1/2" x 11" paper or in an Excel format provided by the Owner.
   2) Make sum of total scheduled costs equal to the Contract Sum. Do not include State of Washington sales tax.
      a) Indicate individual Items of Work
         (1)
      b) For items on which progress payments will be requested for materials or equipment purchased/fabricated/delivered but not yet installed, show "initial value" for payment request and "value added" for subsequent stage(s) of completion on that unit of work.
      c) For each line item of installed value exceeding 10% of the Contact Agreement total lump sum, show breakdown by major products or operations under each item.
      d) Breakdown major work efforts by floor or phases or systems as appropriate for ease of review and confirmation of Work completed.
      e) Breakdown mechanical and electrical systems or phases with material and labor as separate items.
      f) Show each allowance as a discrete line item.
   3) Round figures to nearest dollar amount;
   4) Coordinate items of the Schedule of Values so that there is a corresponding item in the Progress Schedule.
   5) Change orders are to be added as separate items to the Schedule of Values as they are approved by the Owner.
   6) Revise as requested by Owner.

C. Subcontractors List: Submit a list of all contracted Subcontractors and major material suppliers consistent with the General Conditions.
   1) Update list monthly with additional information from current awards.

D. Retainage: Submit instructions for the disposition of retainage funds.

1) In accordance with the General Conditions and Chapter 60.28 RCW, the Owner shall reserve a Contract retainage in an amount not-to-exceed 5% percent of the moneys earned by the Contractor as trust fund for the protection and payment of:
   a) The claims of any person arising under the Contract Documents;
   b) The State of Washington with respect to taxes imposed pursuant to Titles 50, 51, and 82 RCW which may be due from the Contractor, and;
   c) Owner for claims it may have against the Contractor.
2) Contractor's written instructions should be addressed to, William Shore Memorial Pool District, c/o Steven Burke, 225 East 5th Street, Port Angeles, Washington 98362.
3) At the option of the Contractor, the moneys reserved by the Owner shall be:
   a) Retained in a fund by the Owner; or
   b) Bonded by the Contractor (if approved by Owner) for all of the Contract retainage in a form acceptable to the Owner; or
   c) Deposited by the Owner in an Owner's interest-bearing account in a bank, mutual savings bank, or savings and loan association; or
   d) Placed in escrow with a bank or trust company by the Owner.
      (1) Escrow Agent: If the retained funds are to be placed in escrow, Contractor will select the escrow agent, subject to approval by the Owner. The selected agent must be a bank or trust company in the State of Washington.
      (2) Escrow Agreement: Pursuant to electing the escrow option, an escrow agreement shall be executed by Contractor, Owner, and bank. A completed and signed escrow agreement in a form acceptable to the Owner must be on file with the Owner for payment before the Contractor's first Application for Payment is processed.
      (3) Escrow Payments: As each progress estimate is presented for payment, Contractor shall make a voucher request for the retained funds that are to be placed in escrow. Such requests should be in a form acceptable to the Owner's Project Manager and submitted in four (4) copies with the related Application for Payment. Upon receiving a retainage invoice, the Owner will issue a check payable to the Contractor and the bank jointly. Such checks will be mailed to the bank and the Contractor will receive copies of check transmittal letters.
      (4) Escrow Investments: The bank shall invest the retained funds in bonds and other securities selected by the Contractor from the following list approved by the Owner:
         (a) Bills, certificates, notes or bonds of the United States;
         (b) Other obligations of the United States or its agencies;
         (c) Obligations of any corporation wholly owned by the government of the United States;
         (d) Indebtedness of the Federal National Mortgage Association;
         (e) Time deposits in commercial banks, mutual savings banks, and savings and loan associations in the state of Washington;
         (f) Deposits in savings accounts in commercial banks, mutual savings banks, and savings and loan associations in the State of Washington.
      (5) The investments selected must mature on or prior to the date set for Substantial Completion, including extensions thereof or no later than forty five (45) days following the Final Acceptance of the Work. Interest on such investments shall be paid to the Contractor by the escrow agent as it accrues.
      (6) Escrow Costs and Fees: All escrow costs and fees shall be paid by the Contractor, in accordance with the escrow agreement.

3. DRAFT APPLICATION FOR PAYMENT

A. Submit a draft Application for Payment for Owner's review and comment on a form or in a format approved by the Owner. The cutoff date shall be five (5) days prior to actual application or as

otherwise agreed. Include projected costs to the end of the month in the pay request. Provide the following documents (draft documents may be marked by hand):

1) Application and Certificate for Payment on Contract form: Fill in required information.
   a) List Change Orders approved prior to the submission date individually (last on the form). Use Owner's Change Order designation and description (similar to an original component item of work). DO NOT BILL FOR CHANGE ORDER PROPOSALS UNTIL AN APPROVED CHANGE ORDER HAS BEEN RECEIVED FROM THE OWNER INCORPORATING THE PROPOSAL.
2) Monthly Subcontractors List and Certifications form.
3) Stored Materials: The Contractor is solely responsible for stored materials. Requests for payment on materials stored shall be for materials properly stored on the Project site. In addition to the requirements of the General Conditions payment for materials stored off-site shall be at the sole option of the Owner and comply with conditions stipulated by the Owner. These conditions may include, but are not limited to:
   a) Provide supplier invoice
   b) Provide insurance or a bond to cover the total loss of material and time impact to Project
4) Monthly Progress Schedule updates.
5)

B. The A/E and/or Owner and the Contractor shall review the Project Record for completeness and accuracy.

4. APPLICATION FOR PAYMENT

A. The Contractor shall submit two (2) hardcopies of the Application for Payment to the Owner after responding to the Owner's comments to the draft application.
B. Contractor is cautioned to carefully check all extensions, totals, and required information for accuracy before submittal.
C. Applications are to be signed by a responsible officer of the Contractor. Do not sign in black ink. (NO PHOTOCOPIES OF SIGNATURE ARE PERMITTED)
D. The Application for Payment shall include the following forms and documents:
   1) Application and Certificate for Payment on Contract
   2) Construction Invoice Voucher (for the total amount due)
   3) Retainage Invoice Voucher on a form or in a format acceptable to the Owner (for the retainage amount)
   4) Monthly Subcontractors List and Certifications
   5) Invoices for materials stored off-site
E. If required in the General Conditions, certified payrolls for the Contractor and all Subcontractors must be on file with the Owner's Project Manager before payment is made to the Contractor.
F. When the Owner's Project Manager and A/E finds the Application for Payment properly completed and correct, they will sign and transmit all copies of the Application for Payment to the Owner's accounting office for processing.
G. If the A/E or Owner's Representative find the Application for Payment improperly or incorrectly executed, an annotated copy will be returned for a new submittal.
H. Only minor corrections are allowed on the original, with approval of Owner.

5. PRIOR TO FINAL APPLICATION FOR PAYMENT

A. The final Application for Payment request will be accepted for processing only after providing satisfactory completion of the following:
   1) Application and Certificate for Payment on Contract
   2) Construction Invoice Voucher (for the total amount due)
   3) Retainage Invoice Voucher on a form acceptable to the Owner (for the retainage amount
   4) Monthly Subcontractors List and Certifications
   5) Invoices for materials stored off-site

6) Final Completion procedures are complete per Section 01 77 00 "Closeout Procedures"
7) Final Schedule of Values "Contract Sum"

6. RELEASE OF RETAINAGE

A. Pursuant to the completion of Work performed in accordance with the Contract and Final Acceptance by the Owner, the following requirements must be satisfied prior to the release of retained Contract funds.
   1) "Notice of Completion of Public Works Contract": This Department of Revenue form will be completed by the Owner, establishing the date of Final Acceptance thereon. A copy of the notice shall be mailed to the Department of Revenue, the Employment Security Department, and the Department of Labor and Industries, and a copy will be transmitted to Contractor.
   2) "Certificate of Payment of State Excise Taxes by Public Works Contractor": Following receipt of the Owner's Notice of Completion of Public Works Contract form and after determining that all taxes, interest and penalties due from Contractor have been paid, the Department of Revenue will issue this certificate to Owner, thereby notifying the Owner that it has no objection to the release of retainage to the Contractor.
   3) "Certificate of Payment of Contributions, Penalties and Interest on Public Work Contract": Upon receiving a copy of the Owner's Notice of Completion of Public Works Contract form from the Owner and determining that the Contractor is in compliance with the provisions of the Employment Security Act, the Employment Security Department will issue this certificate to Owner, thereby notifying the Owner that it has no objection to the release of retainage to the Contractor.
   4) Upon receiving a copy of the Owner's Notice of Completion of Public Works Contract form and determining that the Contractor is in compliance with the provisions of Chapter 51 RCW for payment of industrial insurance premiums, the Department of Labor and Industries will issue a certificate for the Owner, thereby notifying the Owner that it has no objection to the release of retainage to the Contractor.
   5) "Affidavit of Wages Paid on Public Works Contract": An Affidavit of Wages Paid, for the Contractor, each Subcontractor, and each sub-tier Subcontractor approved by the Industrial Statistician of the Department of Labor and Industries, must be submitted by the Contractor to the Owner. Contractors and Subcontractors may file the Affidavit of Wages Paid either on-line at the website link provided or by completing the forms manually.
   6) "Certificate of Payment of Labor and Materials": This Owner's form shall be completed by the Contractor and returned to Owner. If the only exception to full payment to all Subcontractors is retainage owed to Subcontractors, the appropriate box on the form should be checked.
   7) Retainage: If the retained funds are on deposit in Owner accounts, the Contractor shall notify the Owner of the total amount retained and submit to the Owner for payment. If these funds have been placed in escrow at the direction of Contractor, no further invoice is required.

B. Retainage will be paid by the Owner to the Contactor sixty (60) days following the date of Final Acceptance, contingent upon Contractor's compliance with provisions of public works statues and as stated above. If there are either unpaid taxes or unsatisfied claims of lien against the retained percentage, disbursement of retainage funds will be made in accordance with State of Washington law.

C. Address all transmittal of retainage documents to the, William Shore Memorial Pool District, c/o Steven Burke, 225 East 5th Street, Port Angeles, Washington 98362.

PART 2 - PRODUCTS (Not Used)

PART 3 - EXECUTION (Not Used)

END OF SECTION

01 31 00 - Project Management and Coordination

PART 1 – GENERAL

1. SUMMARY

A. This Section specifies administrative and procedural requirements for project management and coordination during construction, in addition to the requirements specified elsewhere in the Contract Documents.

2. GENERAL COMMUNICATION

A. The Owner shall designate, in writing, the Owner's Project Manager and Owner's Representative for this Project.
B. All verbal communications between Owner, A/E, and Contractor shall be for clarification and collaboration purposes and are not binding unless issued in writing through a Field Order or Change Order.
C. Contractor communications by and with A/E's consultants shall be through the A/E, and A/E's communications by and with the Contractor's Subcontractors shall be through the Contractor.
D. In case of an emergency:
   1) Contact the Owner's Project Manager, or if he is unavailable, the Owner's Representative; and
   2) Follow emergency procedures in accordance with *Section 01 35 23 "Owner Safety Requirements."*

3. CORRESPONDENCE

A. Address all correspondence to Owner's Project Manager.
B. All correspondence to and from Contractor will be routed through the Owner's Project Manager.

4. CONTRACTOR REQUEST FOR INFORMATION

A. When field conditions or Contract Documents require clarification or verification by the A/E or A/E's consultants, a written RFI is to be submitted per the following:
   1) Identify the nature and location of each requested clarification and/or verification using the RFI form or a form or in a format approved by the Owner. Provide as a minimum the following information:
      a) Project name and number
      b) Date
      c) Date response required by
      d) RFI number
      e) Subject
      f) Initiator of the question
      g) Indication of costs, if known
      h) Location on site
      i) Contract Drawing reference
      j) Contract Specification section and paragraph reference
      k) Descriptive text
   2) Number each RFI sequentially beginning with #001. Submit only one question per RFI. Also, RFI's shall be categorized as ARCH, MECH, ELEC, etc.

5. CLARIFICATIONS

A. Clarifications may be discussed with A/E, or A/E's consultants, with concurrence of Owner. Following the discussion, the Contractor shall document on an RFI form any agreed upon modification which does not require a Change Order. The A/E may provide supplemental information to clarify the Contract Documents. RFIs and A/E supplemental information (ASI) which modify or change the Work will be authorized only by Change Order.

6. NON-CONFORMANCE REPORT

A. Non-Conforming Work: Work found defective, or in any way not in accordance with the requirements of the Contract Documents, is defined as non-conforming Work.

B. Procedure: If, after an oral discussion or written notification, the Contractor fails to correct Work that is found defective or not in accordance with the Contract Documents, the Owner will issue a Non-Conformance Report (NCR). Upon receipt of an NCR, the Contractor shall take immediate action to resolve the Work to the Owner's satisfaction, or remove and replace with conforming Work at Contractor's expense and with no increase in Contract Time. Corrective actions for non-conforming Work shall be discussed at construction progress meetings and be completed no later than prior to Final Completion.

1) Where non-conforming Work requires re-design by the A/E, such re-design costs shall be borne by the Contractor.

7. COORDINATION

A. General Coordination:

1) The Contractor shall be in charge of performance for the Project, as well as directing and scheduling of all Work. Final responsibility for performance, interface, and completion of the Project shall be the Contractor's.

a) Anticipate interrelationship of all Subcontractors and their relationship with the total Work.

b) Resolve differences or disputes between Subcontractors and materials suppliers concerning coordination, interference, or extent of the Work. Contractor's decisions, if consistent with Contract Document requirements, shall be final.

2) Cooperation with building occupants may be required when scheduling construction activities that create excessive noise or structure-borne vibration. The Contractor is to cooperate with the Owner in coordination of all work to minimize these impacts to the Owner's operations (see *Section 01 50 00 "Temporary Facilities and Controls"*).

B. Special Coordination:

1) The Contractor is responsible for receiving, unloading, storage and handling of Owner Furnished Contractor Installed (OFCI) items from the time of receipt through Substantial Completion.

1) The Contractor is responsible for protecting OFCI and Owner Existing Contractor Installed (OECI) items from damage, such as: damage from exposure to the elements; or from damage to a warranty due to Contractor's improper installation and testing. The costs to repair or replace items damaged while in the Contractor's possession shall be borne by the Contractor.

(1) The Contractor shall consult with the Owner to determine the warranty requirements of OFCI and OECI items.

C. Mechanical and Electrical Coordination:

1) Resolve all tight or restricted conditions involving work of various sections in advance of installation.

2) Coordinate the Work of all sections to ensure that all fixtures, devices, switches, outlets, ducts, pipes, and similar items can be installed as shown.

D. Job Site Field Measurements and Templates:

1) Obtain field measurements required for accurate fabrication and installation of work included in the Contract Documents. Exact measurements are the Contractor's responsibility.

2) Furnish or obtain templates, patterns, and setting instructions as required for installation of all work. Verify in field.

PART 2 - PRODUCTS (Not Used)

PART 3 - EXECUTION (Not Used)

END OF SECTION

01 31 19 - Project Meetings

PART 1 – GENERAL

1. SUMMARY

A. This Section specifies administrative and procedural requirements for meetings during construction in addition to requirements specified elsewhere in the Contract Documents.

B. Contractor and Subcontractor representatives attending meetings must be qualified and authorized to act on behalf of their firms.
   1) Meeting minutes, Contractor construction activity data and work plans, A/E field reports and other such communications shall be distributed electronically by e-mail.

C. Related Sections:
   1) Section 01 32 16 “Construction Progress Schedule”

2. PRECONSTRUCTION, PROGRESS and INSTALLATION MEETING

A. The Owner may, at its discretion schedule:
   1) Preconstruction Meeting: Meetings shall to be held prior to the Contractor mobilizing and beginning any Work to discuss any preconstruction issues not previously addressed during the preconstruction period included in the separately executed Preconstruction Services Contract. This meeting will review Contract administration requirements and mobilization procedures
   2) Construction Progress Meeting: Progress meetings shall occur weekly until Substantial Completion has been achieved
   3) Pre-Installation Meeting: Meetings shall be held prior to the Contractor or Subcontractors beginning work on each definable feature of the Work identified in the Contract Documents to require a pre-installation meeting and/or as required by the Owner’s Project Manager. Notify Owner's Project Manager at least ten (10) working days in advance of each pre-installation meeting.
   4) Change Order Meetings: Meetings shall be held to review and resolve any change order proposals, change order requests, or other change order issues pertaining to Contract Modification. Meetings shall be held monthly until all Change Order Proposals are resolved.
   5) Commissioning Meetings: Regular, on-site commissioning meetings shall occur weekly during the start-up and commissioning phase of the Work.

B. Meeting locations: To be determined

C. Participants shall vary depending on type of meeting, at a minimum they should include:
   1) Contractor's Project Manager, Superintendent, and other key personnel as appropriate;
   2) Owner's Project Manager and Owner’s Representative;
   3) A/E and the A/E's sub-consultants, as appropriate;
   4) Owner’s consultants, as appropriate; and
   5) Others, including the Contractor’s major Subcontractors as appropriate, if identified.

D. Contractor will administer the meeting

E. Contractor will record and distribute copies of the minutes within seven (7) days of the meeting to all meeting participants.

F. Contractor will provide a draft Agenda to the A/E and Owner for input prior to meeting.

G. Owner may call special meetings as needed.

PART 2 - PRODUCTS (Not Used)
PART 3 - EXECUTION (Not Used)

END OF SECTION

01 32 16 - Construction Progress Schedule

PART 1 GENERAL

1. SUMMARY

A. Section includes: Updates and maintenance of computerized progress schedule and reports, Contract Time adjustments, and payment requests, including the following:
   1) Schedule Updates.
   2) Schedule Revisions.
   3) Time Impact Analyses.

B. Related sections:
   1) This list of Related Sections is provided for convenience only and is not intended to excuse or otherwise diminish the duty of the Contractor to see that the completed Work complies accurately with the Contract Documents.
      a) General Conditions
      b) Section 01 29 76 Progress Payment Procedures
      c) Section 01 31 19 Project Meetings
      d) Section 01 77 00 Closeout Procedures

2. RESPONSIBLE PERSON

A. It is the Contractor's responsibility for scheduling and coordinating the Work of subcontractors, suppliers, and other individuals or entities performing or furnishing any of Contractor's Work.

B. The Scheduler shall be the qualified responsible person for preparation, maintenance, updating, and revision of all schedules. Scheduler to this project shall available on-site as needed to meet the strict requirement of this specification section. Scheduler will attend all project meetings that the Architect, Owner or Contractor determine is necessary.

C. Owner's Project Manager reserves the right to approve any changes in personal assigned as Scheduler when submitted by Contractor. Owner's Project Manager reserves the right to remove Scheduler from the project if found to be incompetent, and the Contractor shall replace the Scheduler with a qualified individual.

3. GENERAL SCHEDULING REQUIREMENTS

A. Owner's Project Manager will conduct Construction Schedule Meeting with Contractor's Project Manager, Scheduler, Superintendent, Owner's Representative and any consultants the Owner deems necessary within 7 calendar days after Notice to Proceed for Construction. At the meeting, the Owner's Project Manager and Contractor will review scheduling requirements. These include schedule updating, reporting requirements, labor and equipment loading, updates, revisions, and schedule delay analysis. The Contractor will present schedule methodology, planned sequence of operations, resource loading methodology, and proposed activity coding structure.

B. Contractor shall schedule windows for Owner-furnished and installed equipment, or Owner furnished and Contractor-installed equipment or materials: The Owner's Project Manager shall provide at the Construction Schedule Meeting anticipated delivery dates of Owner furnished equipment or materials. Contractor shall show these dates, and those already included in the contract specifications, in the schedule.

4. UPDATING THE SCHEDULE

A. Prepare updates using most recent accepted version of schedule. Include:
   1) Actual start dates of activities that have been started.
   2) Actual finish dates of activities that have been completed.
   3) Actual resource availability and use.
   4) Percentage of completion of activities that have been started but not finished.
   5) Actual dates on which milestones were achieved.

6) Update activities by inputting percent complete figures with actual dates.
7) Update schedule logic to match actual as-built and future planned work sequences.
8) Adjust resource logic restraints to optimize the use of resources within available CPM float.
9) Use retained logic in preparing Schedule Updates.
10) When necessary, input remaining durations for activities whose finish dates cannot be calculated accurately with a percent complete figure only.
11) Contract Change Orders. Each executed change order shall be inserted within the appropriate schedule activities where the change order work is directly related. Do not simply add the Change Orders to the end of the schedule.
12) Revisions to the schedule may be included that have been previously approved in under Revisions to Schedule.

B. Submit written narrative report in conjunction with each Significant Schedule Update. Describe:
1) Work completed during the update period.
2) The current critical path(s) with respect to each milestone.
3) Description to changes to the construction sequence of major portions of work.
4) Activities added to or deleted from schedule. Identify added activities in manner distinctly different from original activity designations.
5) Current or anticipated problems and delays affecting progress, impact of these problems and delays and measures taken to mitigate impact.
6) Assumptions made and activities affected by incorporating change order work into the schedule.
7) Activities added to or deleted from the schedule are to adhere to resource loading requirements.
8) Description of each executed Change Order and why it has or has not impacted the critical path.

C. Identify overall progress of each Major Item of Work in the Summary Schedule.
D. Should monthly Schedule Update, which must be submitted with the draft Application for Payment, show planned project completion earlier than current Contract completion date, show early completion time as a schedule activity, identified as “Project Float.”
E. Should monthly Schedule Update, which must be submitted with the draft Application for Payment, show project completion later than current Contract completion date prepare and submit a Schedule Revision in accordance with the Revisions to Schedule.

5. REVISIONS TO SCHEDULE

A. Submit Revised Schedule within 5 days upon the Owner’s Project Manager’s request and monthly with the draft Application for Payment:
1) When delay in completion of any activity or group of activities indicates an overrun of the Contract Time.
2) When delays in submittals, deliveries, or work stoppages are encountered making necessary the re-planning or rescheduling of activities.
3) When Contract modification necessitates schedule revision, submit schedule analysis of change order work with cost proposal.

B. Submit revised schedule and materials as specified under Submittals of Progress Schedules.
C. Make revisions on most recently accepted version of schedule.
D. Create a separate submittal for Schedule Revisions. Do not submit with Schedule Updates.
E. Schedule revisions will not be reflected in the schedule until after the revision is accepted by the Owner. This includes Schedule Revisions submitted for the purpose of mitigating a Contractor-caused project delay (Recovery Schedule).

6. WEEKLY SCHEDULE

A. Submit to Owner's Project Manager, on the last working day of every week, a progress schedule showing the activities completed during the previous week and the schedule of activities for the following 2 weeks.
B. The activity designations used in the Weekly Schedule must be consistent with those used in the initial agreed upon Construction Schedule and the monthly Schedule Updates which must be submitted with the draft Application for Payment.
C. Contractor and Owner's Project Manager must agree on the format of the Weekly Schedule and monthly update of the Construction Progress Schedule.
D. Weekly Schedule should indicate locations of work, critical activities, early start and early finish dates, actual start and actual finish dates, progress, and remaining durations for each activity in the three-week schedule.

7. ADJUSTMENT OF CONTRACT TIMES

1. Contract Time will be adjusted only for causes specified in Contract Documents.

PART 2 PRODUCTS (Not Used)
PART 3 EXECUTION (Not Used)

END OF SECTION

01 33 00 - Submittal Procedures

PART 1 - GENERAL

1. SUMMARY

A. This Section specifies general administrative and procedural requirements for submittals required by the Contract Documents.

B. Where required by the specifications, the Contactor shall submit descriptive information that will enable Architect to determine whether Contractor's proposed materials, equipment, and Work methods are in general conformance to the design concept and in accordance with the drawings and specifications. The information submitted may consist of drawings, specifications, descriptive data, certificates, samples, test results, product data, and such other information, all as specifically required in the drawings and specifications. In some instances, specified submittal information describes some, but not all features of the material, equipment, or Work method.

2. SUBMITTAL FORMAT

A. Submittals should be numbered by the Contractor prior to sending them to the A/E for review.

B. Numbering should be as follows:

1) First set of three numbers are allocated to sequentially identify how many submittals have been submitted on project
2) Second set of six numbers are allocated to identify the Specification Section relating to the submittal.
3) Third set of three numbers are allocated to identify the number of submittals in each Specification Section.
4) Last is a letter to show if it is a resubmittal.

XXX-XXXXXX-XXX-A
(Example: 001-311100-001-A)

C. Examples:

1) Submittal # 002-311100-001A is the 2nd submittal overall; it is in spec section 311100; it is the 1st submittal so far in that spec section; and "A" indicates that it is the first time it has been submitted.
2) If a submittal is returned as "Revise and Resubmit", a resubmitted number would look like this: # 007-311100-001B. That means it is the 7th submittal overall; it is in spec section 311100; it is the resubmittal of the 1st submittal under that section. It is much easier to find the original rejected submittal, if its resubmittal carries the same sequential number under the spec section (01) as it did originally.

3. SUBMITTAL PROCEDURES

A. Coordination: Contractor shall review submittals for completeness, accuracy, and compliance with the Contract Documents, and shall coordinate the transmittal of submittals to ensure there is no delay in the construction Progress Schedule. Submittal sequencing should coincide with the Contractor's Submittal Schedule.

1) Allow fourteen (14) calendar days turnaround for each submittal, from time of receipt by the Owner. For complex submittals or submittals requiring coordination with subsequent submittals, plan additional turnaround time.
   a) Provide a "Priority List" when submitting several submittals within a short time.
2) A/E reserves the right to withhold action on a submittal requiring coordination with other submittals until related submittals are received.
3) Submittals received from sources other than Contractor will be returned without action.

B. Submittal Preparation: Contractor shall identify or place a label or stamp on each submittal for processing. Include the following information on the label:

1) Date
2) Owner's Project name
3) Name of Contractor and submittal number
4) Name of the entity that prepared the submittal
5) Specification reference number
6) For Shop Drawing submittals, Contractor's certification that the submittal has been coordinated and reviewed for compliance with the requirements of the Contract Documents, and is approved for A/E's action.
7) Where more than one option is presented within a Product Data submittal, the Contractor shall strike out all portions of the document that are not applicable to the project such that it is clear as to the exact products and options the Contractor intends to provide.

C. Submittal Transmittal: Contractor shall include a transmittal with each submittal package.
   1) Address no more than one topic, or related topics, on a single transmittal (i.e., mechanical items shall not be submitted with electrical items; miscellaneous specialties shall not be grouped; shoring shall be submitted separate from foundations).
   2) Record relevant information including, but not limited to: the requested review return date (in order to maintain the construction Progress Schedule) and, for Shop Drawings, variations from the requirements of the Contract Documents.
   3) Provide the minimum number of each required submittal as noted in the Contract Documents and/or as follows:
      a) Shop Drawings: one (1) PDF
      b) Product data: one (1) PDF
      c) Samples: three (3) samples
      d) Mock-ups: As required by the Contract Documents

      Reference the Contract Documents for additional submittal requirements
   4) Material and Color Samples: Submit samples of actual materials and colors.
      a) Where variation in color, pattern, texture or other characteristics are inherent in the material, submit no less than four (4) variations of each sample to show approximate limits of the variations.

D. Electronic Document Format Requirements:
   1) Submittals are to be transmitted in electronic (PDF). Submit a discrete electronically created PDF document for each product.
   2) Electronic Re-Submittal Formatting Requirements: When the Contractor is required to re-submit a Product Data submittal in an electronic file format, the Contractor shall resubmit only the updated portions of the submittal in order to aid the A/E and Owner in the review process. The Contractor shall also maintain a conformed version of the submittal that is modified as the re-submitted portions are reviewed. The Contractor shall edit the final, conformed submittal to include all modifications and corrections made during the review process into a single document. It shall not be acceptable to provide the original submittal with revisions attached. This final, conformed submittal document is intended to be included in the O&M. Refer to *Section 01 78 23 – Operation and Maintenance Data.*

E. A/E's Action: Except for submittals provided for the Owner's information, the A/E will: review each submittal, mark each submittal with a uniform self-explanatory action stamp indicating action taken, and return promptly. Typically action stamps indicate:
   1) Accepted without exception;
   2) Subject to noted corrections;
   3) Returned for re-submittal after correction; and
   4) Rejected as non-compliant with the Contract Documents.

F. Compliance with Contract Documents requirements is the Contractor's responsibility.
   1) A/E's approval of submittals does not relieve the Contractor from responsibility for a proper installation, compliance with applicable codes, or coordination of the Work.

2) All submittals required by the Contract Documents will be reviewed by the Owner for CAD drafting compliance, PDF compliance, and to determine completeness of the documents provided.

4. SHOP DRAWINGS

A. General: Shop Drawing submittals are defined in the General Conditions and include, but are not limited to, product data, samples and mock-ups, and layout drawings.
   1) Do not reproduce Contract Documents as Shop Drawings.
   2) For CAD Shop Drawing submittals, see *Section 01 77 00 "Closeout Procedures."*

B. Product Data: Product data includes manufacturer's printed installation instructions, catalog cuts, standard color charts, rough-in diagrams and templates, standard wiring diagrams, and performance curves.
   1) Submittal of standard product data is acceptable only when specific reference to the requirements of the Contract Documents is included. Submit specially prepared manufacture's product data when standard product data is insufficient.
   2) Mark each product data submittal and show the following information:
      a) Compliance with specified product requirements
      b) Compliance with any specified industry standards and testing agency standards, with testing agency labels and seals
      c) Manufacturer's printed recommendations
      d) Applicable choices and options
      e) Notation of coordination requirements
      f) Notation of dimensions established by field measurement, as appropriate
   3) Samples and Mock-ups: Samples include, but are not limited to, actual colors, materials and products to be provided. Mock-ups include field installations and partial assemblies of components.
      a) Prepare samples to facilitate review. Provide the following information:
         (1) Generic description of the sample
         (2) Source of the sample
         (3) Confirmation of availability and delivery time
      b) Where samples are for selection of appearance characteristics from a range of standard choices, submit a full set of choices for the material or products.
      c) Maintain sets of approved samples and mock-ups at the Project site for quality comparisons throughout the course of construction.
   4) Layout Drawings: Drawings include, but are not limited to, fabrication and installation drawings, layouts, schematics, diagrams, schedules, patterns, and templates.
      a) Submit drawings drawn to accurate scale. Indicate, at a minimum, the following information:
         (1) Dimensions
         (2) Identification of products and materials included
         (3) Compliance with product installation requirements and/or industry standards
         (4) Notation of coordination requirements
         (5) Notation of dimensions established by field measurement

PART 2 - PRODUCTS (Not Used)
PART 3 - EXECUTION (Not Used)

END OF SECTION

01 35 23 - Owner Safety Requirements

PART 1 - GENERAL

1. SUMMARY

A. This Section specifies minimum requirements for safety on the construction site including:
   1) Contractor responsibility (regarding safety)
   2) Contractor safety program and plan submittals
   3) Contractor safety requirements
   4) Contractor safety reporting
   5) Construction “fire safety” requirements
   6) Chemical hazard communication

B. For additional provisions related to safety precautions, refer to the General Conditions.

2. CONTRACTOR RESPONSIBILITY

A. The Contractor is solely and completely responsible for compliance with all applicable laws, codes and regulations regarding safety (whether noted in this Section or not) and for creating and maintaining a safe working environment, including safety of all persons and property on the jobsite (whether the requirements of this Section address a particular situation or not).

B. The Contractor shall maintain the jobsite and perform the Work in a manner which meets or exceeds statutory and regulatory requirements for the provision of a safe place to work and which minimizes safety risks to personnel of the Contractor, Subcontractors, Owner, general public or other parties. This obligation shall apply continuously and not be limited to normal working hours.
   1) The Contractor shall ensure that all Contractor and Subcontractor personnel are provided sufficient training, and shall take such actions as are necessary to maintain a safe environment on the construction site. Such training and actions shall include, but not be limited to, ensuring that such employees are familiar with governing construction safety requirements and the requirements for compliance with applicable regulations.
   2) The Contractor shall monitor the jobsite to ensure that employees do not create unsafe conditions for others, and to comply with the provisions of the Site Specific Safety Plan.
   3) The Contractor shall establish and communicate clear expectations to its employees and Subcontractors of any tier (and their employees) of their obligation to notify the Contractor and any at risk party of any potential health or safety hazard affecting themselves or others.
   4) The Contractor shall conduct on-site safety meetings weekly, or other frequency as appropriate, that shall be mandatory for all employees.

C. The Contractor shall designate one on-site competent individual(s) to be the “Safety and Health Officer” who is qualified and authorized to supervise and enforce compliance with the Contractor’s Site Specific Safety Plan during the performance of the Work. The Contractor is responsible to ensure that all necessary monitoring equipment, protective clothing, and other supplies and equipment are available to implement the Plan. The Contractor’s Safety and Health Officer(s), Company Safety Program (see Section 1.3A below), Site Specific Safety Plan (see Section 1.3B below), and all related equipment, clothing, supplies, and other items required to support the Officer(s) and implement the Program and Plan are a Specified General Conditions cost.
   1) The Contractor shall require each Subcontractor to provide an on-site safety manager (competent individual) for the duration of work at the Project site. The Subcontractor may designate its Superintendent as the safety manager whose responsibilities will include Project safety including, but not limited to: review pre-task plans, critical lift plans, rigging and installation means and methods, fall protection, trenching excavations, electrical safety, Occupational Safety and Health Administration (OSHA) and Washington Industrial Safety and Health Act of 1973 (WISHA) regulations compliance, and second tier Subcontractor safety monitoring and compliance.

D. Safety Violations: In the event of WISHA violations by the Contractor or any of its suppliers or Subcontractors of any tier for unsafe practices involving imminent danger to personnel of the Owner, Contractor, Subcontractors, or others, the Contractor shall immediately correct the hazardous situation which caused the violation prior to any work continuing in the affected area. If such violations exist and corrective actions have not been taken by the Contractor, the Owner may order the Contractor to stop work (to be followed up in writing the same day), until satisfactory corrective action has been taken per the General Conditions.

3. CONTRACTOR SAFETY PROGRAM AND PLAN SUBMITTALS

A. Company Safety Program: The Contractor shall submit a copy of its Company Safety Program to the Owner. The Company Safety Program shall contain, at a minimum, the following elements:
   1) Organizational Structure: Include names of individuals who will perform safety duties, titles, work assignments, authority and reporting relationships.
   2) Training Program: Who, how, and when training is provided; method of employee training concerning safety rules and procedures; and training in use of protective equipment.
   3) Protective Equipment: List of personal protective equipment to be provided to employees.
   4) Accident Prevention and Loss Control Plan: Work site inspection and hazard correction procedures; disciplinary procedures for safety infractions; and accident response (investigation and reporting procedures).
   5) Field Implementation and Supervision: Identify the Safety and Health Officer(s) that will lead field implementation of the Company Safety Program and Site Specific Safety Plan. The Safety and Health Officer(s) shall be on the project site at all times during the progress of the Work and as appropriate for all work subsequent to Substantial Completion. The Safety and Health Officer(s) shall have complete authority to take those actions necessary to ensure compliance with the Contractor responsibilities and safety requirements specified in this section and elsewhere in the Contract Documents.

B. Site Specific Safety Plan: The Contractor and each of the Contractor's Subcontractors shall review the Contract Documents, and the Contractor shall develop and submit a copy of a "Site Specific Safety Plan" to the Owner. The Site Specific Safety Plan shall describe who, how, and when the Contractor's safety personnel will be deployed in the field to implement the Company Safety Program and Site Specific Safety Plan and supervise, monitor and improve Program and Plan performance. The Site Specific Safety Plan shall be tailored to the unique issues of the Project and the specific types of hazards likely to be encountered throughout all phases of the Work, be in compliance with WISHA and all other regulatory requirements, and contain, at a minimum, the following elements:
   1) Application of Company Safety Program: The Site Specific Safety Plan shall address how the elements listed in this Section 1.3A will be specifically applied and modified in addressing the unique issues related to the Project.
   2) Specific Hazards: The Site Specific Safety Plan shall address, as applicable, the following, and other specific hazards for the Project:
      a) Odor notification
      b) Excavation and rescue plans
      c) Pedestrian safety
      d) Overhead hazards and flying objects
      e) Hot works
      f) Hazardous materials and chemical exposure
      g) Methane abatement
      h) Safety issues related to Owner's "Prior Occupancy"
      i) Rigging - aerial lifts and forklifts
      j) Electrical safety
      k) Scaffolding and personnel lifts
      l) Noise and dust

m) Lock-out/Tag-out and control of hazardous energy
n) Work in confined spaces
o) Housekeeping and safe access
p) Silica
q) Fall prevention
r) Steel erection activities
s) Crane safety
t) Temporary lighting plan which is coordinated with construction phasing and logistics plan
u) Traffic control and safety

4. CONTRACTOR SAFETY REQUIREMENTS

A. Safety Training: Contractor shall provide construction site orientation for all employees (including Subcontractor employees) to become familiar with the Site Specific Safety Plan prior to commencing work. Contractor shall, on a weekly basis, perform safety training on hazards specific to the phase of work for all employees. These meetings shall be mandatory for all construction employees.
   1) Subjects should include site specific safety issues and procedures and discussion of corrections resulting from any violation in safety procedures. A log of subjects covered and a copy of the attendance records of each meeting shall be submitted to the Owner's Representative on the day the meeting occurs.

B. Respiratory Equipment: Any personnel performing work requiring the use of respiratory protective equipment shall be fully trained in the use of such equipment. Contractor must have a respiratory protection program and ensure that all workers wearing respirators have medical clearance and fit testing, as appropriate, for the type of respirators used.

C. Personal Protective Equipment: Contractor shall ensure all construction personnel to be equipped with and utilize personal protective equipment in accordance with Labor and Industries standards. As a minimum requirement, all personnel working on the construction site shall be required to use approved hardhats, safety glasses, and substantially constructed work boots. In addition, high-visibility safety apparel shall be worn in accordance with the American National Standards Institute and the International Safety Equipment Association (ANSI/ISEA) standard 107-2004.

D. First Aid: The Contractor shall maintain at the Contractor’s field office, or other well known place at the Project site, all materials (e.g., a first aid kit) necessary for giving first aid to the injured, and shall establish, publish, and make known to all employees procedures for ensuring immediate removal to a hospital or a doctor's care, persons (including personnel) who may have been injured on the construction site. Construction personnel shall not work on the construction site before the Contractor has established, and made known, procedures for removal of injured persons to a hospital or a doctor's care. If the Contractor and/or any Subcontractors work crew consist of five or more employees, the Contractor shall ensure that at least one of such employees has a valid and effective first aid card.

E. Safety Walk-through: In addition to WISHA requirements, the Contractor shall conduct a safety walk-through of the Project with the Owner's Representative a minimum of once a month during the course of construction. If a safety manager is required for any Subcontractor, the safety manager shall also attend the safety walk-through. The Contractor shall:
   1) Document and maintain a written record of the hazards and unsafe practices noted during the walk-through and provide copies to the Owner as requested;
   2) Ensure that corrective action is promptly taken to eliminate the items recorded; and
   3) Maintain copies of all inspections performed by other competent individuals on the construction site during the course of construction.

F. Job Hazards Analysis: The Contractor shall plan daily work, considering procedures with the potential for personnel injury and implement appropriate practices to avoid injuries with focus on engineering controls, personal protective equipment needs, and mitigation for exposure to cuts and

lacerations. At each construction progress meeting, the Contractor shall present its plan for addressing hazards likely to be encountered in the next week.

1) The Contractor shall develop and implement a program requiring task planning at the foreman level, including at the Subcontractor's foremen level.

5. CONTRACTOR SAFETY REPORTING

A. Reporting Injuries and Incidents: Contractor shall immediately notify the Owner's Representative of any injury or incident to persons, including personnel, on the construction site. Contractor shall conduct an immediate investigation with an emphasis on preventative actions and lessons learned. The Contractor and its Subcontractor shall document the investigation and submit a hard copy of the report on OSHA Form 301 "Injury and Illness Report," or equivalent, to the Owner within 24 hours of the incident. The Contractor shall report on a monthly basis the total number of hours worked on-site by the Contractor's employees and Subcontractors, and the total number of recordable incidents and lost time accidents. Contractor shall submit copies of the Project First Aid Log to Owner's Representative on a monthly basis.

B. Reporting Potentially Serious Hazards: Contractor shall immediately notify the Owner's Representative of any potentially serious hazard to persons, including personnel, on the construction site. Contractor and its Subcontractor shall conduct an immediate investigation and submit a report to the Owner's Representative within 24 hours of becoming aware of the potentially serious hazard. The report shall describe the potentially serious hazard, the results of the Contractor's investigation, and any steps the Contractor has taken to prevent an injury or incident from occurring based on the potentially serious hazard.

C. Emergency Procedures:

1) For emergencies requiring an ambulance, fire department, or police assistance, the Contractor shall call emergency services (fire and police at 911).

6. CONSTRUCTION FIRE SAFETY REQUIREMENTS

A. Fire Safety During Construction and Demolition: The Contractor shall conform to Chapter 14, "Fire Safety During Construction and Demolition," of the International Fire Code, as locally amended, and any additional provisions as outlined herein for precautions against fire, flammable and combustible liquids, flammable gases, explosive materials, fire protection, fire reporting, fire fighting access, means of egress, standpipes, fire sprinklers, and roofing operations.

1) The Contractor shall provide adequate separation between Owner-occupied buildings and construction trailers and sheds.

B. Hot Work Procedures:

1) Contractor shall establish a system for documentation and control of "hot work" activities which include the use of portable gas, grinding, or arc welding equipment and conduct operations in a manner that is fire-safe for the work area and adjacent areas. Hot work permits are to be posted at the jobsite in an accessible and conspicuous location. Maintain the premise clear of rubbish, debris, or other materials constituting a potential fire hazard. The local fire code is incorporated herein by reference; adhere to all applicable provisions as determined by the local fire department. Contractor and Subcontractors shall obtain from the local Fire Department engineering inspection section, a permit for all hot work activities prior to performing this Work.
   a) Whenever practical, the Contractor shall perform cutting and welding operations off-site.

2) Maintain copies of all hot work related permits for Owner's review upon request, including, but not limited to:
   a) Cutting and welding;
   b) Roofing/hot-tar kettle; and
   c) Storage of flammable materials (e.g., propane, butane) and/or compressed gases.
3) Prior to conducting hot work activities, the Contractor shall ensure all of the following fire safety precautions have been taken:

a) Cutting and/or welding equipment must be thoroughly inspected and found to be in good repair, free of damage or defects.
b) A multi-purpose dry chemical, portable fire extinguisher must be located so that it is immediately available to the area of work and is fully charged and ready for use.
c) At least one fire alarm pull station or means of contacting the fire department (i.e., site telephone) must be immediately available and accessible to person(s) conducting the cutting/welding operation.
d) Floor areas under and at least 35 feet around the cutting/welding operation must be swept clean of combustible and flammable materials.
e) All construction equipment fueling activities and fuel storage must be located at least 35 feet away from cutting/welding operations.
f) Fire resistant shields (e.g., fire retardant plywood, flameproof tarpaulin, and metal), must cover combustible floors.
g) Combustible materials and finished surfaces, equipment, electrical cables, and personnel must be provided with protection to prevent damage or injury from molten metal, falling sparks, and welding arcs.
h) Spark / slag catchers (e.g., fire retardant plywood, flameproof tarpaulin, metal, etc.), must be suspended below any elevated cutting/welding operation.
i) All floor and wall openings must be covered to prevent sparks/slag from traveling to other unprotected area.
j) Containers in or on which cutting/welding will take place must be purged of flammable vapors.

C. Fire Extinguishers Required for Construction: Provide multipurpose dry chemical portable fire extinguishers for the Work in accordance with the International Fire Code Chapter 14, as locally amended, and as required by WISHA and other applicable regulations. Existing building fire extinguishers or new fire extinguishers specified by the Contract Documents for the Project do not alleviate Contractor's responsibility to provide temporary fire extinguishers for the Work.
D. Occupant Egress in Existing Buildings: The Contractor shall not block active exits, exit hallways, exit corridors, and the exit access to a public way.
1) Exits are to remain free of construction materials, equipment, and rubbish at all times, unless approved by Owner.
E. Emergency Access: Outdoor storage and staging operations and construction fencing shall not impede egress; restrict or narrow fire fighting access (including roads or lanes); or present a fire exposure to existing buildings.
1) Access to emergency services including, but not limited to, fire hydrants, fire department connections, fire command centers, fire alarm panels, valves and similar equipment and systems for emergency vehicles and emergency response personnel must be kept free and unobstructed at all times, unless specifically approved by the Owner.
2) Temporary obstruction of emergency access may be allowed for special cases (e.g., crane installations and hoisting) on a short-term basis. A written plan must be submitted to the Owner for approval at least two weeks prior to the scheduled date of obstruction.

7. CHEMICAL HAZARD COMMUNICATION

A. General: The Owner and the Contractor are responsible under the Washington Administrative Code 296-800-170 through 296-800-18020 (Employer Chemical Hazard Communication) to provide a safe and healthy environment for their employees.
B. Responsibilities:
1) The Owner maintains a centralized collection of all Material Safety Data Sheets (MSDS) for Owner materials. These MSDS are available to the Contractor if an unknown chemical is discovered in the work area; a worker is concerned about exposure; and the Contractor suspects the material originates with the Owner.
a) The Contractor shall coordinate with the Owner's Representative to receive this information.

2) The Contractor shall establish a Chemical Hazard Communication Program (WAC 296-155-180) which includes multiemployer workplaces (WAC 296-800-17007) and provide hazard communication information and training to its employees and the employees of the Contractor's Subcontractors (of any tier).
   a) The information shall include: signage demarcating regulated areas and entrances; signage indicating where the Contractor's binder containing all MSDS used for Construction is located; and prominently posted lists identifying all hazardous chemicals present in the workplace.
   b) In addition to MSDS training which is regulated by the Employer Chemical Hazard Communication standard, training shall include those MSDS that are available for any Owner's chemical product present at a jobsite.

C. The Contractor shall provide the Owner chemical hazard information (MSDS) for all chemical products the Contractor and the Contractor's Subcontractor's (of any tier) bring onto the jobsite for Owner's information prior to application including, but not limited to, all paints, glues, mastics, epoxies and cleaning products.
   1) At the jobsite, the Contractor shall establish and maintain a binder(s) of all hazardous chemicals MSDS used for Construction and indicate where utilized.
      a) The MSDS shall be bound in a slant-D, 3-ring, view binder with clear vinyl overlay inserts on the front cover and spine. The binder shall have heavy duty nylon reinforced hinges.
      b) The binder shall have a cover slip sheet and a spine sheet typed with "MSDS used for Construction," Project name, Project number, A/E name, and Contractor name.
      c) The MSDS shall be organized by specification division and section with tabbed dividers between the sections or, when presented in a logical format by Contractor and approved by Owner, between categories.

8. CHEMICALS OF INTEREST REPORTING

A. Prior to work being performed by the Contractor and/or the Contractor's Subcontractors (of any tier), the Contractor shall submit to Owner a completed "Contractor Declaration and Reporting Form for Department of Homeland Security – Chemicals of Interest" for chemicals listed in 6 CFR (Code of Federal Regulations) Appendix A to Part 27 that will be used on the jobsite. Individual declarations shall be provided by the Contractor and the Contractor's Subcontractors (see Appendix A of the Specifications for a copy of the form).

PART 2 - PRODUCTS (Not Used)
PART 3 - EXECUTION (Not Used)

END OF SECTION

01 41 00 - References

PART 1 - GENERAL

1. SUMMARY

A. The Section further describes basic Contract definitions, specification format and content explanations, and industry standards in the Contract Documents.

2. DEFINITIONS

A. Accepted: The term “accepted” is used in conjunction with the A/E’s duties and responsibilities as stated in the conditions of the Contract.
B. Concealed: Spaces out-of-sight such as above ceilings, below floors, between double walls, furred-in areas, pipe and duct shafts, and similar spaces.
C. Directed: Terms such as directed, requested, authorized, selected, approved, required, and permitted mean directed by the A/E, requested by the A/E, and similar phrases.
D. Exposed: Open to view. For example, pipe installed in a walkway tunnel or pipe installed in a room and not covered by other construction.
E. Furnish: Supply and deliver to Project site, ready for unloading, unpacking, assembly, installation, and similar subsequent requirements.
F. Indicated: The term “indicated” refers to graphic representations, notes, or schedules on the Drawings, or other paragraphs or schedules in the Specifications, and similar requirements in the Contract Documents. Terms such as shown, noted, scheduled, and specified are used to help the reader locate the reference.
G. Install: Operations at Project site to place in position for service or use including unloading, unpacking, assembly, erection, placing, anchoring, applying, working-to-dimension, finishing, curing, protection, cleaning, and similar requirements.
H. Installer: An installer is the contractor or another entity engaged by the Contractor, either as an employee, Subcontractor, or contractor of lower tier, to perform a particular construction activity, including installation, erection, application, and similar operations. Installers shall be experienced in the operations they are engaged to perform.
I. Project site: Is the space available to the Contractor for performing construction activities, either exclusively or in conjunction, with others performing other work as part of the Project. The extent of the Project site is shown on the Drawings and may or may not be identical with the description of the land on which the Project is to be built. Certain construction activities may extend beyond the Project site.
J. Provide: Furnish and install, complete and ready for intended use.
K. Regulations: The term “regulations” includes laws, codes, ordinances, statutes, and lawful orders issued by authorities having jurisdiction (AHJ), as well as rules, conventions, and agreements within the construction industry that control performance of the Work.
L. Trades: Using terms such as carpentry does not imply that certain construction activities must be performed by accredited or unionized individuals of a corresponding generic name, such as carpenter. It also does not imply that requirements specified apply exclusively to tradespersons of the corresponding generic name.

3. SPECIFICATION FORMAT AND CONTENT EXPLANATION

A. Specification Format: These Specifications are organized into divisions and sections based on the Construction Specification Institute’s (CSI) Master Format.
   1) Title: The Specifications are divided into division and section for the convenience of writing and using. The titles of these are not intended to imply a particular meaning or to fully describe the work of each division, subdivision, or section and are not an integral part of the text which specifies the requirements.

2) Three Part Section: Each section of Specifications has been subdivided into three parts for uniformity and convenience (Part 1 – GENERAL, Part 2 - PRODUCTS, and Part 3 - EXECUTION). These do not imply a particular meaning and are not an integral part of the text which specifies requirements. Where text for one of the parts is lacking due to project requirements, the part title is included followed by the words "Not Used."

Level of Indexing	Nomenclature	Letters & Punctuation	Identified	Example
1st	Part	Upper Case	Numerical	PART 1 - GENERAL
2nd	Heading	Upper Case	Numerical	1. SUMMARY
3rd	Paragraph	Upper/Lower Case	Letter	A. General
4th	Subparagraph	Upper/Lower Case	Numerical	1) General
5th	Subparagraph	Upper/Lower Case	Letter	a) General
6th	Subparagraph	Upper/Lower Case	Numerical	(1) General

B. Specification Content: This Specification uses certain conventions regarding the style of language and the intended meaning of certain terms, words, and phrases when used in particular situations or circumstances. The conventions are explained as follows:
   1) Abbreviated language: Abbreviated words and meanings used in the Contract Documents shall be interpreted as appropriate. Words implied, but not stated, shall be interpreted as appropriate. Words implied, but not stated, shall be interpolated as the sense requires. Singular words will be interpreted as plural and plural words interpreted as singular where applicable as the context of the Contract Documents indicate.
   2) Imperative and streamlined language is used generally in the Specifications. Requirements expressed in the imperative mood are to be performed by the Contractor. At certain locations in the Text, subjective language is used for clarify to describe responsibilities that must be fulfilled indirectly by the Contractor, or by others when so noted.
      a) The words 'shall be' are implied wherever a colon (:) is used within a sentence or phrase.

4. INDUSTRY STANDARDS

A. Applicability of Standards: All construction shall be in accordance with industry standards. Except where the Contract Documents include more stringent requirements, applicable construction industry standards have the same force and effect as if bound or copied directly into the Contract Documents to the extent referenced. Such standards are made a part of the Contract Documents by reference.

B. Publication Dates: Comply with the industry standards in effect as of the execution date of the Contract Agreement.

C. Conflicting Requirements: Where compliance with two (2) or more standards are specified and where the standards may establish, different or conflicting requirements for minimum quantities or quality levels, the Contractor shall promptly report to the A/E, in writing, requesting a decision before proceeding with the Work.
   1) Minimum quantity or Quality Levels: The quantity or quality level shown or specified shall be the minimum provided or performed. The actual installation may comply exactly with the minimum quantity or quality specified, or it may exceed the minimum, within reasonable limits, to comply with these requirements. Indicated numeric values are minimum or maximum, as appropriate, for the context of the requirements.

D. Copies of Standards: Each entity engaged in construction on the Project is required to be familiar with industry standards applicable to its construction activity. Copies of applicable standards are not bound within the Contract Documents.

1) Where copies of standards are needed to perform a required construction activity, the Contractor shall obtain copies directly from the publication source.

E. Abbreviations and Names: Trade association names and titles of general standards are frequently abbreviated. Acronyms or abbreviations, as referenced in Contract Documents are defined to mean the recognized name of the trade association. Names and addresses are subject to change and are believed, but not assured, to be accurate and up-to-date as of the date of the Contract Documents. Refer to the latest edition of the "Encyclopedia of Associations" published by Thomson Gale for a listing of associations and general standards abbreviations.

F. Federal Government Agencies: Names and titles of federal government standard - or Specification -producing agencies are often abbreviated. Acronyms or abbreviations referenced in the Contract Documents may indicate names of standard - or Specification-producing agencies of the federal government. Names are subject to change and are believed, but are not assured, to be accurate and up-to-date as of the date of the Contract Documents.

PART 2 - PRODUCTS (Not Used)
PART 3 - EXECUTION (Not Used)

END OF SECTION

01 45 00 - Contractor Quality Control

PART 1 - GENERAL

1. SUMMARY

A. General Requirements: Comply with the quality control provisions specified in the Contract Documents including this Section and perform quality control testing and inspection, and the surveillance of the Work for quality, unless specifically designated to be performed by Owner.

B. Contractor Quality Control (CQC) shall consist of plans, procedures, and organization necessary to provide materials, equipment, workmanship, fabrication, construction, and operations that comply with the requirements of the Contract Documents. CQC shall cover construction operations keyed to the Progress Schedule including, but not limited to, fabrication on-site and off-site, and field and factory tested construction mock-ups.

C. Owner's special inspection and testing agency services are specified in *Section 01 45 23 "Testing and Inspecting Services*" and may be required to ensure the Work is in accordance with the Contract Documents, except where those tests are specifically indicated to be performed by the Contractor in the Contract Documents. These services do not relieve the Contractor of responsibility for compliance with Contract Documents requirements.

2. CQC MEETINGS

A. General Work Plan Meeting: Contractor shall meet with Owner's Project Manager and/or Owner's Representative and A/E to discuss CQC procedures. Items for discussion shall include, but not be limited to:
   1) Identification of the Contractor's CQC Representative;
   2) Interrelationship of Contractor, AE and Owner's Representative;
   3) CQC administrative procedures and pre-installation work plans;
   4) Submittals and persons responsible for Shop Drawing review;
   5) Forms for recording the CQC program;
   6) Testing, inspections and approvals records;
   7) On-site and off-site fabrication and installation procedures; and
   8) Field constructed mock-ups.

B. Pre-installation CQC Work Plan Meetings: Develop a "CQC Work Plan." Complete the work plan and submit to Owner with each notification requesting a pre-installation meeting. The work plan shall serve as the basis for discussion and review of the Contract Documents requirements. The work plan will assist to assure that materials and equipment delivered and assembled for construction conform to the requirements of the Contract Documents, and that control testing and CQC procedures are documented.
   1) When requested by the Owner, the Contractor shall revise a CQC Work Plan and provide the Owner a final CQC work plan with changes addressing comments or clarifications from the A/E and/or Owner's special inspection services.

3. CONTRACTOR QUALITY CONTROL REQUIREMENTS

A. Identify a "CQC Representative" who shall be on the Project site at all times during progress of the Work, and as appropriate for all work subsequent to Substantial Completion. The CQC Representative shall have complete authority to take those actions necessary to ensure compliance with the Contract Documents.
   1) Identify persons responsible for review and approval of Shop Drawings and other submittals required by the Contract Documents.

B. Qualifications of CQC Representative: The Contractor shall propose and Owner shall approve, in writing, the Contractor's CQC Representative. The Owner's approval does not limit the responsibility of the Contractor to ensure adequate quality control on the Project, nor does the

Owner assume any responsibility or liability with respect to the Contractor's obligations under the Contract Documents for quality control. The CQC Representative must have construction management experience including prior experience with projects of similar construction, size, and complexity.

1) During progress of the Work, the Owner will monitor and evaluate the performance of the CQC Representative based on the conformance of the Work with the Contract Documents and an assessment of the accuracy, timeliness and completeness of the daily QC Report. If the CQC Representative fails to perform to the sole satisfaction of the Owner, the Contractor shall propose a replacement CQC Representative for the Owner's approval, at no additional cost to the Owner.

C. Control of On-Site and Off-Site Construction: Contractor's Quality Control procedures shall include the following phases of control and management for each definable feature of the Work:
   1) Pre-installation Meeting: A pre-installation meeting shall be held prior to beginning work on each definable feature of the Work specified in the Contract Documents (see Section 01 31 19 "Project Meetings").
   2) In-Progress Inspection Phase: In-progress quality control testing and inspection, and surveillance of the Work for quality shall be performed continuously to verify that quality standards are maintained throughout the Work. Adjustment to quality control procedures and CQC work plans may be required, based upon the results of the inspections and testing
      a) The Contractor shall:
         (1) Discuss quality control procedures at construction progress meetings;
         (2) Report the results of the inspections and any changes to quality control procedures in the daily QC Report; and
         (3) Revise CQC work plans for Owner's records, if changes are required.
   3) Above-Ceiling Final Inspections: The Contractor shall provide to the Owner a minimum two (2) week notice prior to ceiling installations for the A/E to conduct above-ceiling final inspections.
      a) The Contractor shall perform corrective work and provide reasonable time for the A/E to validate the work complete prior to covering from sight.
   4) Contractor's Final Punch List Report: The CQC Representative shall thoroughly inspect all aspects of the construction (including the Subcontractor's work) and produce a final punch list report of work requiring correction and/or incomplete work that shall be issued to the Subcontractors with instructions to complete prior to requesting Owner's final inspections. The Contractor's written request for Owner's final inspection shall certify that all features of the Work are installed and have been reviewed by the Contractor to determine compliance with the Contract Documents.
      a) The Contractor's final punch list report shall be prepared by the Contractor, in a format acceptable to the Owner.
         (1) The report shall include a comprehensive Project room number list and additional entry listings for site work, building enclosure, roofs, and other items not designated with a room number to document the entire Project.
         (2) The Owner's final inspections items will be added to the Contractors punch list report by the A/E.
         (3) The Owner will manage the consolidated listing of all open inspection items until all items are signed-off by the Owner.

PART 2 – PRODUCTS (Not Used)
PART 3 - EXECUTION (Not Used)

END OF SECTION

01 45 23 - Testing and Inspection Services

PART 1 - GENERAL

1. SUMMARY

A. General Requirements: Comply with the testing and inspection, and correction of Non-Conforming Work provisions specified in this Section and elsewhere in the Contract Documents.

B. Owner's Responsibilities:
   1) The Owner will select and employ an independent “Testing Agency” to conduct the tests and inspections in accordance with applicable standard methods of the American Society for Testing and Materials (ASTM) or other standards as a requirement of the building permit.
   2) The Owner may provide other special inspection services to inspect and verify that the Work installed is in accordance with the Contract Documents and construction industry standards.

C. Contractor's Responsibilities:
   1) All other tests and inspections which are required to obtain regulatory approval by Authorities Having Jurisdiction (AHJ) shall be provided by and paid for by the Contractor and the cost shall be included in subcontract bid packages.
   2) The Contractor shall provide other testing services where specified in the Contract Documents.

2. DESCRIPTION

A. For the purpose of this Section, all references made to Testing Agency, or waterproofing and roofing inspections, or geotechnical consulting firm shall be referred to as those tests or inspections which will be conducted by an inspector provided by the Owner.

B. Testing and Inspection: Testing and inspection of materials maybe required by the building permit or as directed by the Contract Documents or by the Owner or AHJ. Quantities and extent of tests and inspections shall be as specified and/or required by the Owner or AHJ.

3. QUALITY ASSURANCE

A. Qualifications: The inspector for all work of this Section, except for geotechnical and waterproofing and roofing special inspectors, shall be a registered inspector employed by an approved inspection and/or Testing Agency as listed by the Washington Association of Building Officials (WABO) Special Inspection Registration Program. All inspection personnel used on this Project are subject to being disapproved from the Project at the sole discretion of the Owner. Minimum levels of qualifications as stated in the WABO Special Inspection Registration Program for various portions of the required Testing Agency inspections and testing must be complied with.
   1) The special Inspector for waterproofing and roofing must have the required technical knowledge and experience for the product being installed.
   2) The Owner may select a Testing Agency, other than the agency employed by the Contractor, to perform tests required by the building permit.
   3) Geotechnical inspection will be performed by a licensed geotechnical consulting firm.

4. DUTIES OF TESTING AGENCY

A. General: The Testing Agency shall conduct testing and inspection services, interpret them, evaluate the results for compliance with the building permit and the Contract Documents, and report the findings to the Owner’s Project Manager, Owner’s Representative, A/E, Contractor, and AHJ. Testing and inspection services shall be in accordance with applicable standard methods of ASTM or other standards specified by AHJ, the Contract Documents, and construction industry standards. The Testing Agency shall reasonably support overtime, second shift, and out-of-area activity if requested by the Contractor and approved at the Owner’s sole discretion.

B. Non-Conforming Work: The Owner’s Testing Agency inspectors will document and immediately notify the Contractor, the Owner’s Project Manager, and the Owner's Representative of any Work found defective or not in accordance with the requirements of the Contract Documents.

C. The Owner's inspectors are not authorized to:
   1) Release, revoke, alter, or enlarge on the requirements of Contract Documents;
   2) Approve or accept any portion of the Work, except as allowed by the special inspection duties delegated by AHJ for building permit inspections and testing;
   3) Perform any duties of the Contractor; or
   4) Stop the Work.

5. COSTS

A. Tests Required by AHJ: All tests and inspections required by the AHJ shall be paid by the Contractor as part of subcontract bid packages, except as noted elsewhere.
B. Additional tests and inspections not specified but requested by the Owner or A/E shall be paid for by the Owner.
   1) However, if the results of such tests and inspections are found to be not in accordance with the Contract Documents, the Contractor will be back-charged for all costs of this testing and inspection as well as re-testing, re-inspection and Owner's consultants' services.
C. Costs for additional tests or inspections required because of a Contractor change in products or materials, or source, after a submittal has been reviewed and accepted, shall be borne by the Contractor.
D. Costs of any testing which is required solely for the convenience of the Contractor in its scheduling and performance of the Work shall be borne by the Contractor.
E. Costs for verification testing and inspection of Work done without timely notice, with improper supervision, or contrary to construction practice, shall be borne by the Contractor.
F. Costs for testing of materials for which fabrication and mill reports are required, but not furnished, shall be borne by the Contractor.
G. Costs of any testing which is the responsibility of the Contractor as specified in the Contract Documents shall be borne by the Contractor.

6. TESTS AND INSPECTION REPORTS

A. Copies of Test and Inspection Reports: Electronic copies of Owner's Testing Agency (or other special inspection services) reports and Contractor's test and inspection reports shall be exchanged between Owner and Contractor at weekly intervals and shall be provided to AHJ as required. All reports will be signed by a registered engineer. Such reports shall include all tests made, regardless of whether such tests indicate that the material is satisfactory or unsatisfactory. Samples taken but not tested and records of special sampling operations that are required shall also be reported.
   1) Submit copies of inspection reports, certifications, notices, correspondence, and similar documents and records established in conjunction with building industry standards bearing upon the Work.

7. CONTRACTOR'S RESPONSIBILITIES

A. General: Inspection of the Work by the Owner's special inspectors and/or Testing Agency shall not relieve the Contractor from responsibility for compliance with Contract Documents requirements. Owner's special inspectors and/or Testing Agency and Owner's Representative shall have authority to reject Work whenever the provisions of the Contract Documents are not being complied with, and the Contractor shall instruct his employees accordingly.
B. Coordination: The Contractor's shall initiate, coordinate, and conform to the required tests and inspections of AHJ.
C. Access for the Purpose of Inspection: The Contractor shall ensure the Owner's special inspectors and/or Testing Agency have free access to all parts of the Work and to the shops where the Work is in preparation; are provided proper facilities for safe access for such inspection; and are reasonably furnished equipment, tools, samples, certifications, test reports, design mixes, storage, and assistance as requested by the Owner's Inspector.

D. Storage Facilities: The Contractor shall furnish adequate facilities for the sole use of the Owner's Testing Agency to provide safe storage and curing space for test specimens that must remain on-site prior to transport to the laboratory.
E. Data: The Contractor shall furnish accepted submittals and approved Change Orders, certificates, and similar data as may be required by Owner's inspectors to perform their work to assure compliance with the Contract Documents.
F. Notice: Furnish notice to Owner's Project Manager and/or Owner's Representative and coordinate with Owner's inspectors. Provide a minimum of five (5) working days notice in advance of all required tests and a minimum of forty-eight (48) hours in advance of all required inspections, unless otherwise specified.
G. Cancellations: Contractor shall give sufficient advance notice to Owner's Project Manager and/or Representative and Inspectors to allow rescheduling of their work load in the event of cancellation or time extension of any scheduled test or inspection.
    1) Any charges from an Inspector due to insufficient advance notice of cancellations or time extensions shall be borne by the Contractor, at the Owner's sole discretion.

8. TEST FAILURES

A. General: The Owner's Project Manager and/or Owner's Representative may require a re-test of a sampled material when a sample or procedure has failed to pass the required tests. In such cases, two samples shall be tested and the material shall be rejected if either sample fails.
    1) In the event any test or inspection indicates failure of a material or procedure to meet the requirements of the Contract Documents, all costs for re-testing or re-inspection shall be borne by the Contractor.

9. REPORTING TEST FAILURES

A. General: Immediately upon determination of a test failure, the Owner's inspector shall telephone the test results to the Owner's Representative and Contractor. By the end of the following day, the Owner's inspector shall send written test results to those named on the distribution list.
B. Contractor shall similarly report test failures to Owner's Project Manager and Owner's Representative resulting from work of testing agencies provided by the Contractor.

PART 2 - PRODUCTS (Not Used)
PART 3 - EXECUTION (Not Used)

END OF SECTION

01 50 00 - Temporary Facilities and Controls

PART 1 GENERAL

1. RELATED WORK DESCRIBED ELSEWHERE

The provisions and intent of the Contract, including the General Conditions, Supplementary Conditions, and other sections of the General Requirements, apply to this work as if specified in this section.

2. DESCRIPTION OF WORK

The Work includes the requirements to provide temporary facilities required by both the Contractor and the District until the acceptance of the Contract. The Work also includes compliance with all controls or ordinances with respect to safety, noise, dust, fire and police action, civil disobedience, security, or traffic.

3. UTILITIES

A. It shall be the Contractor's responsibility to provide adequate facilities for Contractor's operation, including:
   1) Water: Drinking water for employees shall be provided in sanitary containers and maintained fresh each day.
   2) Construction Electricity: The Contractor shall make all arrangements for the furnishing of electric power for construction purposes. The power meter shall be registered in the name of the Contractor and all charges for installation and electric energy shall be borne by the Contractor.
   3) Toilet Room Facilities: The Contractor shall install and maintain necessary temporary sanitary toilet facilities during the term of this contract. Toilet facilities for employees shall be maintained in a sanitary condition. Toilets shall be of a chemical type; remove at completion of work and disinfect the premises.

4. USE AND OCCUPANCY

A. The Contractor will be allowed space for the storage of materials and the pursuance of the Work under this Contract. Employee parking will be confined to the Contractor's work and storage area.
B. Security: The construction site shall be closed to the public at all times. The Contractor shall abide by special request of security personnel, and local police and fire departments.
C. Fences and Enclosures
   1) General: Furnish and install a temporary fence around the entire construction area as indicated on the drawings.
   2) Construction: The temporary fence shall consist of woven wire mesh not less than six feet in height, complete with metal or wood posts and all required bracing, and with truck and pedestrian gates, as indicated on the drawings.

5. TIME PERIOD AND COSTS

A. Maintain all temporary facilities and controls as long as needed for the safe and proper completion of the work. Remove as directed by the Engineer or at the completion of the work.
B. All cost associated with this section are to be considered incidental to the project and shall not be measured separately for payment.

PART 2 PRODUCTS (NOT IN USE)
PART 3 EXECUTION (NOT IN USE)

END OF SECTION

01 71 23 - Field Engineering

PART 1 – GENERAL

1. SUMMARY

A. The contract drawings provide baseline and benchmark references; the Contractor will be responsible for the layout of individual items of the Work.

2. RELATED WORK SPECIFIED ELSEWHERE:

A. Section 01 11 00 - Summary of Work
B. Section 01 33 00 - Submittals
C. Section 01 45 00 – Quality Control
D. Other sections as related to Surveying and Quality Control

3. SURVEYING:

A. The Contractor shall provide such field engineering services as are required for proper completion of the Work including, but not necessarily limited to:
   1) Establishing and maintaining lines and levels from control points and baselines provided by the contract drawings.
   2) Construction staking for all construction activities such as location of features, gridlines, structures including elevations of inverts, pipe slopes and rim elevations.
   3) Recording of as-built information as a Specified General Conditions cost.

B. Survey base data:
   1) The site plan for the construction project area was compiled by the designer of record.
   2) The Architect makes no representation that the survey information is complete or that it addresses every site condition which may be significant to the Work.
   3) The provision of the survey information by the Contract Documents does not relieve the Contractor of the responsibility to carefully examine the site and to take into account any conditions or variance with or in addition to the conditions shown on the survey.
   4) The existence and location of underground and other utilities and facilities indicated as existing are not guaranteed. Before beginning site work, investigate and verify the existence and location of underground utilities and other construction.

C. Survey Quality Assurance.
   1) The Contractor's surveyor shall be a Professional Land Surveyor licensed in the State of Washington. The Contractor shall keep updated survey field notes in a standard field book and in a format set by the Architect. These field notes shall include all survey work performed by the Contractor's surveyor in establishing line, grade and slopes for the construction work. Copies of these field notes shall be provided the Architect upon request and, upon physical completion of the Work, the field books shall be submitted to the Architect and become the property of the Architect.
   2) If the survey work provided by the Contractor does not meet the standards of the Architect, the Contractor shall, upon the Architect's Written Notice, remove the individual or individuals doing the survey work and retain a suitable replacement surveyor. If this fails, the Architect, at the Contractor's expense, may complete the survey work required and deduct the cost from the contract amount.
   3) The Architect and Owner reserve the right to check all work laid out by the Contractor during the progress of the work, as deemed necessary to verify conformance with the plans and specifications. The Contractor shall allow a reasonable time to permit such checks before completing the work. These checks will be made during the regular working hours.
   4) If existing reference and control points are damaged, moved, altered, or destroyed by the Contractor, the Surveyor's cost of re-establishing such points shall be borne by the Contractor.
   5) All costs for survey work required to be performed by the Contractor is included as part of the Contract Agreement

4. Temporary Structural Engineering

A. The Contractor's Structural Engineer shall advise the Contractor as to the safety and adequacy of all temporary structural provisions necessary for cranes and hoisting, erection and/or alteration of the building structure and shall assume the responsibilities and duties as it relates to means and methods for these items (e.g., erection sequence, temporary bracing, cutting):
   1) Temporary bracing shall be coordinated with other trades to permit continuous operation of construction.
   2) Should it be necessary to modify the structural design to accommodate construction means and methods, the Structural Engineer shall advise the Contractor who shall immediately notify the A/E and await his/her direction.
   3) Proposed changes or modifications to the structural design shall be submitted to the A/E for approval prior to the Contractor incorporating changes or modifications into the Work.

B. All costs for Engineering work required to be performed by the Contractor is included as part of the Contract Agreement

5. SUBMITTALS

A. Comply with pertinent provisions of *Section 01 33 00 - Submittals.*

B. Upon request of the Architect or Owner, the Contractor shall submit:
   1) Data demonstrating qualifications of persons proposed to perform field engineering services.
   2) Documentation verifying accuracy of field engineering work.
   3) Certification, signed by the Contractor's surveyor, that elevations and locations of improvements are in conformance or non-conformance with requirements of the contract documents.

6. PROCEDURES:

A. In addition to procedures directed by the Architect or Owner for proper performance of the Contractor's responsibilities, the Contractor shall:
   1) Protect construction control points, including grade control.
   2) Preserve permanent reference points during progress of the work as shown on the contract drawings or staked in field.
   3) Preserve grade control stakes.
   4) Not relocate existing reference and control points without approval of the Architect and Owner.
   5) Report damaged or destroyed reference or control points to the Architect and Owner
   6) Be responsible for any increased costs or delays to the Contract relating to reference and/or control points which are damaged, moved, altered or destroyed by the Contractor or its subcontractors, suppliers, agents or employees.
   7) Discontinue use of reference points alleged to be in error until accuracy of the points can be verified.

PART 2 – PRODUCTS (NOT IN USE)

PART 3 - EXECUTION

1. CONSTRUCTION LAYOUT:

A. The Contractor shall:
   1) Employ a surveyor licensed by the State of Washington to lay out the Work of this Contract.
   2) Establish working lines for each structure and at reasonable intervals across the site lay out the work described by the contract documents using recognized surveying methods and keeping an accurate field book of work completed.
   3) Calculate and measure required dimensions within indicated or recognized tolerances. Do not scale drawings to determine dimensions. Advise the entities engaged in construction activities of marked lines and levels provided for their use. As construction proceeds, check every major

element for line, level and plumb.

4) Provide stakes as required by various sections of these specifications and as required for accurate construction, and make staking information available to the Consultant for review prior to executing construction based on staking.
5) Record deviations from required lines and levels and advise the Architect when deviations that exceed indicated or recognized tolerances are detected. On project record drawings record deviations that are accepted and not corrected.

2. AS BUILT INFORMATION:

A. Contractor shall locate and establish grade of completed construction for use in preparing as-built documents of the project. Do not cover work until survey has been completed. As-built information is necessary for, but not limited to, the following:
   1) Locations of utility structures, fittings and changes of direction of underground utilities.
   2) Locations of shutoffs, valves and clean-outs for underground utilities, including locations of solenoid valves for irrigation systems.
   3) Corners and/or center lines, and benchmark elevations of bridges, buildings, and other major structures.
   4) Center lines and grades of roads, paths, vehicle gates.
   5) Points at which new utility lines intersect existing.

END OF SECTION

01 73 29 - Cutting and Patching

PART 1 - GENERAL

1. SUMMARY

A. This Section includes the administrative and procedural requirements for cutting and patching and general alterations of the Project, including but not limited to, preparations, products, transitions and adjustments, and repairs and disposal.

B. Related Sections:
   1) 01 35 23 “Owner’s Safety Requirements”
   2) 01 71 23 “Field Engineering”

2. CONTRACTOR RESPONSIBILITY

A. The Contractor shall bear all cost of correcting damaged or destroyed work indicated to remain on the Contract Documents, which is caused from failure to comply with the requirements of the Contract Documents or failure to exercise reasonable care by the Contractor and/or the Subcontractors.

3. SUBMITTALS

A. Notice:
   1) Submit written request two (2) weeks in advance of cutting or alteration which affects:
      a) Structural integrity of any element of the Project;
      b) Integrity of weather-exposed or moisture-resistant elements;
      c) Efficiency, maintenance, or safety of any operational element;
      d) Visual qualities of sight exposed elements; and
      e) Work of Owner or separate contractor.
   2) Include in request:
      a) Project Name
      b) Location and description of affected work
      c) Description of proposed work
      d) Reason for cutting or alteration
      e) Alternatives to cutting and patching
      f) Effect on work of Owner or separate contractor
      g) Written permission to affect separate contractor
      h) Date and time work will be executed, including duration of work
      i) Utility Shutdown Request form, as appropriate
   3) Owner will respond in writing to the submitted request.

B. Visual Matching: When indicated to “match existing,” submit products and/or finishes to match existing adjacent finishes for Owner’s review and approval or, for patching new work, use the specified materials and finishes in the Contract Documents.

PART 2 - PRODUCTS

1. PATCHING AND EXTENDING WORK

A. The Contractor shall provide products specified in the Contract Documents and/or match existing products with an alternate product of the most suitable grade for the intended purpose.

B. The Contractor shall determine the type and quality of existing products and finishes by inspection and/or testing, where necessary.
   1) Remove samples of existing installed work for testing only when approved by Owner.

PART 3 - EXECUTION

1. EXAMINATION

A. Prior to commencing work:

1) The Contractor shall inspect existing conditions to ascertain elements subject to damage or movement and to determine the need for temporary bracing during cutting and patching work; and
2) The Owner has conducted Regulated Materials "Good Faith" Surveys and no known hazardous materials were discovered that have not already been abated.

B. Beginning of cutting or patching means acceptance of existing conditions.
C. After cutting and/or removing existing work:
1) The Contractor shall inspect conditions affecting performance of new work and notify Owner of any unforeseen physical conditions; and
2) Verify that demolition is complete and areas are ready for installation of new work.

2. PREPARATION

A. Move, or remove, items as necessary for access to cutting and patching work.
B. Schedule shut-downs and obtain permits required for performance of the Work.
C. Provide temporary supports to ensure structural integrity of the Work.
D. Provide temporary enclosures, shielding devices and/or other methods to protect the following from damage:
1) Existing conditions that are to remain
2) Owner-occupied areas
E. Establish "hot-works" fire safety precautions required for performance of the Work.

3. PERFORMANCE

A. Execute cutting and patching work in a manner to:
1) Avoid damage to other work;
2) Provide proper surfaces for installation of new work; and
3) Provide a neat transition from existing finishes to new work.
a) Fit new work to existing pipes, sleeves, ducts, conduit and other penetrations through surfaces.
B. For new work made to existing work under warranty, employ original installer or fabricator to perform cutting and patching unless otherwise approved by the Owner
C. Prepare surfaces to provide for the specified installation of new work and finishes.
1) Remove and replace or repair unsuitable substrate materials (e.g., rotted wood, water damaged materials, corroded metals and deteriorated concrete) for new applications.
D. Restore existing building systems that are impacted by cutting and patching work to original operating conditions.
E. For penetrations cut in existing fire-rated separations, completely seal new work with fire-stopping materials to full thickness of the penetrated element.
1) Replace existing fire-stopping materials when disturbed by new work.
F. Unless otherwise indicated in the Contract Documents, cut concrete and masonry materials using a diamond saw in accurately located straight lines. Pneumatic tools are not allowed without Owner's prior approval.
1) Concrete walls: Core-drill pipe penetrations. Saw both sides of wall and break out remainder. Minimize overcuts.
2) Concrete floors: Provide temporary support of elevated floor areas requiring removal and saw-cut. Core-drill pipe penetrations.
3) Masonry walls: Saw-cut along mortar joints. Remove all mortar adhering to edges. Overcuts are not allowed.
4) Wood and/or metal framed walls: Cut wall finish materials in straight uniform lines and remove wall framing as required.
G. Remove debris and abandoned items from the work area, including from concealed spaces.

END OF SECTION

01 77 00 - Close Out Procedures

PART 1 GENERAL

1. RELATED WORK DESCRIBED ELSEWHERE

A. The provisions and intent of the Contract, including the General Conditions, Supplementary Conditions, and other sections of the General Requirements apply to this work as if specified in this section. Work related to this section is described throughout the specifications.

B. Prior to requesting final inspection, the Contractor shall assure itself that the project is complete in all aspects.

2. PRODUCTS

A. Warranty

1) The Contractor warrants the labor, materials and equipment delivered under the contract to be free from defects in design, material, or workmanship, and against damage caused prior to final inspection. Unless otherwise specified, this warranty extends for a period of one (1) year from the date of Substantial Completion.

2) The Contractor shall promptly repair or replace all defective or damaged items delivered under the contract. The Contractor may elect to have any replaced item returned to Contractor's plant at Contractor's expense.

3) In the event of equipment failure, during such time or in such a location those immediate repairs are mandatory, the Contractor shall respond promptly, irrespective of time. If the Contractor is not available, the Owner will effect repairs. The Contractor shall then reimburse the Owner for parts and labor necessary to correct deficiencies as defined within the warranty clause and time.

PART 3 - EXECUTION

1. FINAL DOCUMENTS

A. As-Built Drawings

B. After the completion of the work and before requesting substantial completion, the record drawings shall be completed and submitted to the A/E electronically in PDF format.

2. CLEAN-UP

A. Final clean-up and clean-up during the course of the work is defined in the General Conditions Part 5.17. Those paragraphs are supplemented to provide the following:

1) General: Prior to completion of the work, remove from the job site all tools, surplus materials, equipment, scrap, debris, and waste.

2) Site: Unless otherwise specifically directed by the Engineer, hose down all paved areas on the site and all public sidewalks directly adjacent to the site. Completely remove all resultant debris.

3) Timing: Schedule final cleaning as approved by the Engineer to enable the Owner to occupy a completely clean project.

END OF SECTION

TAB 3

DIVISION 02 – TECHNICAL SPECIFICATIONS

01 57 13 TEMPORARY EROSION AND SEDIMENT CONTROL PLAN

PART 1 – GENERAL

1.01 SECTION INCLUDES

A. Temporary Erosion and Sediment Control Measures.

1.02 RELATED SECTIONS

A. Section 015700 – Temporary Controls

1.03 REFERENCES

A. Washington State Department of Transportation (WSDOT) Standard Specifications for Road, Bridge, and Municipal Construction (current edition).

1.04 SUBMITTALS

A. Catch Basin Insert product data.

B. Geotextile for silt fence product data

1.05 QUALITY ASSURANCE

A. The Contractor will provide weekly inspections of the installed erosion control measures to ensure they're functioning properly. The contractor shall repair any deficiencies within 24 hours of being made aware.

PART 2 PRODUCTS

2.01 TEMPORARY EROSION AND SEDIMENT CONTROL MEASURES

A. Storm Drain Inlet (Catch Basin) Protection: Storm drain inlet protection shall conform to the details shown on the Drawings. Geotextile fabric shall meet the requirements of the WSDOT Standard Specifications Table 1 for moderate survivability, and the minimum filtration properties of Table 2, in Section 9-33.2.

B. Temporary Silt Fence: The silt fence placement and construction shall conform to the details shown on the Drawings. Geotextile fabric shall meet the requirements of the WSDOT Standard Specifications Table 6 for unsupported between posts in section 9-33.2.

PART 3 EXECUTION

3.01 EXAMINATION

A. Examine site to confirm location of erosion control measures as shown on the drawings will prevent sediment laden runoff from leaving the site.

3.02 TEMPORARY EROSION AND SEDIMENT CONTROL MEASURES INSTALLATION

A. Storm Drain Inlet Protection: Install catch basin inserts per manufacturer's instructions. Inserts shall

be installed where shown on the plans.

B. Temporary Silt Fence: Construct the silt fence as outlined in the provided details. Silt fence shall be installed where shown on plans.

C. Stabilized Construction Entrance: Entrance to be constructed as outlined in the provided details. Entrance shall be installed where shown on plans, or in area with highest traffic.

3.03 TEMPORARY EROSION AND SEDIMENT CONTROL MEASURES MAINTENANCE

A. Maintenance required due to improper installation shall be fixed by the Contractor at no additional cost to the Owner.

B. All erosion and sediment control measures shall be maintained by the Contractor for the life of the project. Any labor and equipment required to maintain the functionality of the TESC measures for the life of the contract shall be the responsibility of the Contractor.

END OF SECTION

02 43 00 STRUCTURE MOVING

PART 1 - GENERAL

1.01 SECTION INCLUDES

A. Soil amendments
B. Soil preparation
C. Preparation and finish grading of planting and lawn areas
D. Mulching

1.02 RELATED SECTIONS

The following Sections contain requirements that may relate to this Section:
A. Section 311100 – Clearing and Grubbing
B. Section 312200 - Grading

1.03 REFERENCES

A. Washington Department of Ecology, Western Washington Stormwater Manual, BMP T5.13: Post-Construction Soil Quality and Depth
B. WAC Chapter 173-350, Definitions and Section 220
C. United States Department of Agriculture (USDA) Soil Texture System of Classification

1.04 SUBMITTALS

A. Make submittals in accordance with Section _____ as applicable.
B. Soil Management Plan: Prior to commencement of site work, submit an approved copy of the project Soil Management Plant with an attached implementation schedule.
C. Samples: Submit samples of all soil amendments. Include a list of sources and certification as specified. Soil amendments shall be submitted in one-gallon containers.
D. At the time of Post-Construction Inspection, furnish copies of material verifications such as load tickets, invoices, sales slips, test results and similar items as specified.

1.05 QUALITY ASSURANCE

A. Qualifications of Contractor: The Contractor shall be active and experienced in work of the type specified, and upon request by the Owner and/or Owner's Representative, be able to show evidence of successful completion of projects of similar scope.
B. Regulatory Requirements: Obtain and pay for all permits and testing related to the work of this section.
C. Pre-Grading Inspection: In conjunction with the soil preparation specified herein, meet with the Owner and/or Owner's Representative to discuss and verify requirements, schedule, and proposed soil preparation methods.

1.06 GUARANTEE

A. Guarantee: Guarantee materials and workmanship for a period of one-year following Owner's final acceptance.

1.07 SEQUENCING AND SCHEDULING

A. Coordinate work of other trades specified elsewhere.
B. Do not perform soil preparation work in areas subject to the subsequent work of other sections, unless approved otherwise.
C. Perform work in accordance with the approved schedule specified in paragraph 1.5 SUBMITTALS. If a schedule delay greater than three days occurs, immediately revise and resubmit schedule to reflect each schedule delay.

1.05 MAINTENANCE

A. Maintain the work as specified in this section until final acceptance of the work.

PART 2 - PRODUCTS

2.01 COMPOST

A. Composted material must be in compliance with WA Department of Ecology's specifications, which appear in WAC Chapter 173-350 Section 220; plus the following additional requirements.

B. Additional Requirements

1. The carbon to nitrogen ratio of the compost shall be below 25:1 or below 35:1 if the proposed plantings are composed entirely of plants native to the Puget Sound Lowlands region.
2. The compost shall have an organic matter content of 35% to 65%% as determined by "loss on ignition" test method.

C. Alternative organic materials may be used in lieu of the specified compost if they meet the criteria for carbon to nitrogen ratio, contaminants (as defined in WAC Chapter 173-350 Section 220), and when mixed with existing native soil can achieve a calculated organic content of 5% for turf areas or 10% for planting beds.

D. Submit one-gallon sample, source, and letter of certification from the supplier to the Owner and/or Owner's Representative for approval prior to installation.

2.02 MULCH

A. Specified compost, or fine ground freshwater bark, or stockpiled forest duff from the project site.

B. Submit one-gallon sample, source, and letter of certification from the supplier to the Owner and/or Owner's Representative for approval prior to installation.

2.03 IMPORTED TOPSOIL

A. A mixture of compost, meeting requirements of Section 2.1 above, and sand or sandy loam per USDA soil texture classification. The mixture shall contain a minimum of approximately 5% organic matter for turf areas or a minimum of approximately 10% organic matter for planting beds. The sand or sandy loam shall be free of weeds, deleterious materials, rocks, and debris. 100% of the imported topsoil shall pass through a 3/4" screen, less than 25% shall pass through a #200 sieve.

B. Submit one-gallon sample, source, and letter of certification from the supplier to the Owner and/or Owner's Representative for approval prior to installation.

PART 3 - EXECUTION

3.01 SOIL MANAGEMENT PLAN

A. The Soil management Plan (SMP) will be submitted as part of site development / building permit application, and will include the following:

1. An 11" X 17" or larger site map indicating:
   Option 1. Areas where native soil and vegetation will be retained in place,
   Option 2. Areas where topsoil or subsoil will be amended in place,
   Option 3. Areas that will be stripped and stockpiled prior to grading for reapplication, and
   Option 4. Areas where imported topsoil will be applied.
2. Calculations for volumes of soil to be stockpiled, and amounts of amendment or topsoil to be imported to achieve specified minimum organic matter content.
3. Specified organic amendments and topsoil products to be used, with organic matter content and carbon to nitrogen documented by producer supplied copies of laboratory analyses to demonstrate that requirements will be achieved and that compost meets WAC Chapter 173-350 Section 220 definition of "Composted Material").
4. IF CALCULATED AMENDMENT RATES ARE TO BE USED, site soils to be amended and compost or alternative organic material must be characterized for the following properties: Soil- Bulk density, organic matter content and depth of compacted layers to a depth of 12 inches. Compost or alternative organic material Bulk density, organic matter content, carbon to nitrogen ratio, moisture content. .

Soil samples must be gathered following the distribution plan outlined in the Post-Construction Inspection below, and be composed of material from the entire depth to be amended, excluding any surface mulch layers. Calculations by a Certified Soil Scientist, Crop Advisor or Agronomist must be provided showing that the organic content requirements will be met based on the organic contents and densities of both the site soil and amendments.

3.02 PREPARATION

A. Protect surrounding construction from damage caused by the work of this section.

3.03 SUBGRADES

A. Prepare subgrades as specified in paragraph 3.4 AMENDMENT OPTIONS.

3.04 AMENDMENT OPTIONS

A. Select the soil preparation option which best suits the project site. Different options may be used in different areas of the project. Choose either the "default" pre-approved amendment rate, or a qualified professional may calculate a custom rate based on soil and amendment tests described in Section 3.1.A.4. The selected soil preparation option(s) shall be shown on the Soil Management Plan approved with site development permit.

OPTION 1: Leave Native Vegetation and Soil Undisturbed, and protect from compaction during construction
Identify areas of the site that will not be stripped, logged, graded or driven on, and fence those areas to prevent impacts during construction. If not impacted, either in soils or vegetation, these areas do not require amendment.

OPTION 2: Amend Existing Soil In-Place	
Scarification: Scarify or till subgrade to 8 inches depth (or to depth needed to achieve a total depth of 12 inches of uncompacted soil after calculated amount of amendment is added). Entire surface should be disturbed by scarification. Do not scarify within drip line of existing trees to be retained.	
A. Planting Beds	**B. Turf Areas**
i. PRE-APPROVED RATE: Place and rototill 3 inches of composted material into 5 inches of soil (a total amended depth of about 9.5 inches, for a settled depth of 8 inches); **ii.** CALCULATED RATE: Place and rototill calculated amount of composted material or approved organic material into depth of soil needed to achieve 8 inches of settle soil at 10% organic content	**i.** PRE-APPROVED RATE: Place and rototill 1.75 inches of composted material into 6.25 inches of soil (a total amended depth of about 9.5 inches, for a settled depth of 8 inches); **ii.** CALCULATED RATE: Place and rototill calculated amount of composted material or approved organic material into depth of soil needed to achieve 8 inches of settled soil at 5% organic content.
Rake beds to smooth and remove surface rocks larger than 2 inches diameter.	Water or roll to compact soil to 85% of maximum.
Mulch planting beds with 2 inches of organic mulch.	Rake to level, and remove surface woody debris and rocks larger than 1 inches diameter

OPTION 3: Stockpile site topsoils prior to grading for reapplication. Amend with organic matter or add topsoil if necessary to achieve required organic content to 8 inches depth.	
Scarification: If placed topsoil plus compost or other organic material will amount to less than 12 inches: Scarify or till subgrade to depth needed to achieve 12 inches of loosened soil after topsoil and amendment are placed. Entire surface should be disturbed by scarification. Do not scarify within drip line of existing trees to be retained.	
A. Planting Beds	**B. Turf Areas**
Stockpile and cover soil with weed barrier material that sheds moisture yet allows air transmission, in approved location, prior to grading.	
Replace stockpiled topsoil prior to planting.	
i. PRE-APPROVED RATE: Place and rototill 3 inches of composted material into 5 inches of replaced soil (a total amended depth of about 9.5 inches, for a settled depth of 8 inches); **ii.** CALCULATED RATE: Place and rototill calculated amount of composted material or approved organic material into depth of replaced soil needed to achieve 8 inches of settled soil at 10% organic content	**i.** PRE-APPROVED RATE: Place and rototill 1.75 inches of composted material or into 6.25 inches of replaced soil (a total amended depth of about 9.5 inches, for a settled depth of 8 inches); **ii.** CALCULATED RATE: Place and rototill calculated amount of composted material or approved organic material into depth of replaced soil needed to achieve 8 inches of settled soil at 5% organic content.
Rake beds to smooth and remove surface rocks larger than 2 inches diameter.	Water or roll to compact soil to 85% of maximum
Mulch planting beds with 2 inches of organic mulch or stockpiled duff.	Rake to level, and remove surface rocks larger than 1 inches diameter.

OPTION 4: Import topsoil meeting organic matter content standards.	
Scarify or till subgrade in two directions to 6 inches depth. Entire surface should be disturbed by scarification. Do not scarify within drip line of existing trees to be retained.	
A. Planting Beds: Use imported topsoil mix containing 10% organic matter (typically around 40% compost).	**B. Turf Areas:** Use imported topsoil mix containing 5% organic matter (typically around 25% compost).
Place 3 inches of imported topsoil mix on surface and till into 2 inches of soil.	Place 3 inches of imported topsoil mix on surface and till into 2 inches of soil.
Place 3 inches topsoil mix on surface.	Place 3 inches topsoil mix on surface.
Rake beds to smooth, and remove surface rocks over 2 inches diameter.	Water or roll to compact soil to 85% of maximum.
Mulch planting beds with 2 inches of organic mulch.	Rake to level, and remove surface rocks larger than 1 inches diameter.

3.05 INSPECTION AND VERIFICATION

A. Pre-Grading Inspection: Prior to the commencement of site work, contact the Owner and/or Owner's Representative to provide an inspection to verify the delineation and protection of native soils and vegetation to remain in place, and to verify the proposed location for topsoil and material stockpiling. Make corrections and adjustment as directed by the Inspector.

B. Interim Grading Inspection: Prior to the placement of soil amendments, contact the Owner and/or Owner's Representative to provide an inspection to verify that specified erosion control methods have been implemented, the location of stockpiled soil and materials, and that subgrades are consistent with the Soil Management Plan. Make corrections and adjustment as directed by the Inspector.

B. C.Post-Installation Inspection: Prior to planting, contact the Owner and/or Owner's Representative to provide an inspection to verify that the placement of amendments and soil preparation is consistent with the Soil Management Plan. Provide delivery tickets for soil amendments to verify the quantity of material specified on the Soil Management Plan. Make corrections and adjustment as directed by the Inspector.

D. Mulch Placement Verification: At the completion of planting, contact the Owner and/or Owner's Representative to provide a review to verify that mulch has been installed as specified.

E. Secondary Verification for Failing Sites: If the Inspector determines that the installation does not meet the conditions of the approved Soil Management Plan, additional testing by an independent certified soil consultant will be ordered by the Inspector and paid for by the contractor. Make corrections and adjustment as directed by the Inspector.

3.06 FINAL ACCEPTANCE AND PAYMENT

A. Final acceptance and payment for soil preparation will be contingent on the approval of all inspections, and that the soil preparation is consistent with these specifications and with the approved Soil Management Plan.

END OF SECTION

03 20 00 REINFORCING STEEL

PART 1 GENERAL

1.01 SECTION INCLUDES

A. Foundation reinforcement
B. Cast-in-place retaining wall reinforcement

1.02 RELATED SECTIONS

A. Section 03300 – Cast-in-place concrete

1.03 REFERENCES

A. Washington State Department of Transportation (WSDOT) Standard Specifications for Road, Bridge, and Municipal Construction (current edition).
B. Washington State Department of Transportation (WSDOT) Standard Plans.

1.04 SUBMITTALS

A. Product data for materials and items for reinforcement.

PART 2 PRODUCTS

2.01 GENERAL

A. Reinforcing steel materials and construction shall conform to the requirements of Section 9-07 of the Standard Specifications.

END OF SECTION

03 30 00 CAST IN PLACE CONCRETE

PART 1 GENERAL

1.01 SECTION INCLUDES

A. Foundation
B. Concrete Sidewalk
C. Retaining Walls
D. Barrier Curb and Curb & Gutter

1.02 RELATED SECTIONS

A. Section 321216 – Asphalt Paving

1.03 REFERENCES

A. Washington State Department of Transportation (WSDOT) Standard Specifications for Road, Bridge, and Municipal Construction (current edition).
B. Washington State Department of Transportation (WSDOT) Standard Plans.

1.04 SUBMITTALS

A. Product data for materials and items including reinforcement and forming accessories, admixtures, jointing systems, curing compounds, finish materials, and others requested by the Engineer.

1.05 QUALITY ASSURANCE

A. Contractor shall have a minimum of five years of experience specializing in constructing concrete sidewalk, curbing and pavement and must be willing to provide past performance references if requested by the Engineer.

.

PART 2 PRODUCTS

2.01 GENERAL

B. Concrete materials shall be in accordance with Section 5-05.2 of the WSDOT Standard Specifications and as detailed below.
C. All concrete shall be batched in a prequalified plant as described in Section 6-02.3(4)A and of the WSDOT Standard Specifications.
D. Admixtures for concrete shall comply with Section 9-23.6 of the WSDOT Standard Specifications.
E. Concrete curing compound shall comply with Section 9-23.2 of the WSDOT Standard Specifications

2.02 BUILDING FOUNDATION

A. Concrete mix shall be in accordance with Section 6-02.3(1) of the WSDOT Standard Specifications, Commercial Concrete. Minimum cementitious content shall be not less than 470 pounds per cubic yard.

2.03 CONCRETE SIDEWALK

A. Forms shall comply with Section 8-14.3(2) WSDOT Standard Specifications.
B. Concrete shall be air entrained concrete Class 3000 in accordance with the requirements of Section 6-02.3(2)B of the WSDOT Standard Specifications.
C. Maximum slump of concrete shall be 5.5”.

2.04 CONCRETE RETAINING WALLS

A. Forms shall comply with Section 8-14.3(2) WSDOT Standard Specifications.
B. Concrete shall be air entrained concrete Class 3000 in accordance with the requirements of Section 6-

02.3(2)B of the WSDOT Standard Specifications.
C. Maximum slump of concrete shall be 4.0".

2.05 CONCRETE BARRIER CURB AND CURB AND GUTTER

A. Concrete mix shall be in accordance with Section 8-04.3(1) of the WSDOT Standard Specifications.

PART 3 EXECUTION

3.01 EXAMINATION

A. Carefully investigate site condition and confirm that grading is to the correct elevation. The foundation under the concrete shall be shaped and compacted to a firm even surface conforming to the section shown in the Plans. All soft and yielding material shall be removed and replaced with acceptable material.

3.02 PREPARATION

A. Set up temporary construction stakes and string lines off of installed survey hubs.

3.03 BUILDING FOUNDATION

A. Confirm that structural fill for building pad has been placed and compacted to proper density and grade.
B. Set footing form boards to grade and in a straight line. Form boards similar to perimeter footings are required for interior post footings. Secure forms in place to prevent movement during concrete placement.
C. Place reinforcing steel per plans. Steel shall not deviate from design location by more than 1" horizontally and ½" vertically in footings and 1" vertically in walls. Support and tie reinforcing steel to secure in place during concrete placement.
D. Remove all footing form boards prior to setting wall forms. Wall forms shall be straight and properly stabilized to prevent movement during concrete placement.
E. Place anchor bolts as shown on the plan. Note that anchor bolts shall be within 6" of "J" bar location.

3.04 CONCRETE SIDEWALK

A. Construct concrete sidewalks in accordance with Section 8-14.3(1-5) of the WSDOT Standard Specifications.
B. Maintain minimum thickness of concrete as called out on drawings.
C. Temperature and Time of Placement shall be in accordance with Section 6-02.3(4)D of the WSDOT Standard Specifications.

3.05 CONCRETE RETAINING WALL

A. Cast-in-place concrete retaining walls shall be constructed in accordance with Section 6-11.3(4) of the Standard Specifications. Walls shall have smooth surface finish at all locations.

3.06 CONCRETE BARRIER CURB AND CURB AND GUTTER

A. Construct concrete curb to the dimensions shown in the drawings.
B. Concrete curbs shall be constructed in accordance with Section 8-04.3(1) of the WSDOT Standard Specifications.

END OF SECTION

06 15 00 ROUGH CARPENTRY

PART 1 GENERAL

1.01 SECTION INCLUDES

A. Structural dimension lumber framing.
B. Sheathing.
C. Preservative treated wood materials.
D. Miscellaneous framing and sheathing.
E. Communications and electrical room mounting boards.
F. Concealed wood blocking, nailers, and supports.
G. Miscellaneous wood nailers, furring, and grounds.

1.02 RELATED REQUIREMENTS

A. Section 092600 – Gypsum Board Assemblies

1.03 REFERENCE STANDARDS

A. ASTM A 153/A 153M – Standard Specification for Zinc Coating (Hot-Dip) on Iron and Steel Hardware; 2005.
B. ASTM E 84 – Standard Test Method for Surface Burning Characteristics of Building Materials; 2008.
C. AWPA C2 – Lumber, Timber, Bridge Ties and Mine Ties – Preservative Treatment by Pressure Processes; American Wood Protection Association; 2003
D. AWPA U1 – Use Category System: User Specification for Treated Wood; American Wood-Protection Association; 2007
E. PS 20 – American Softwood Lumber Standard; National Institute of Standards and Technology (Department of Commerce); 2005.
F. WCLIB (GR) – Standard Grading Rules for West Coast Lumber No. 17; West Coast Lumber Inspection Bureau; 2004, and supplements.

1.04 DELIVERY, STORAGE, AND HANDLING

A. General: Cover wood products to protect against moisture. Support stacked products to prevent deformation and to allow air circulation.

PART 2 PRODUCTS

2.01 GENERAL REQUIREMENTS

A. Dimension Lumber: Comply with PS 20 and requirements of specified grading agencies.
   1. If no species is specified, provide any species graded by the agency specified; if no grading agency is specified, provide lumber graded by any grading agency meeting the specified requirements.
   2. Grading Agency: Any grading agency whose rules are approved by the Board of Review, American Lumber Standard Committee (www.alsc.org) *and who provides grading service for the species and grade specified; provide lumber stamped with grade mark unless otherwise indicated.*

2.02 DIMENSION LUMBER

A. Grading Agency: West Coast Lumber Inspection Bureau (WCLIB).
B. Sizes: Nominal sizes as indicated on drawings.
C. Moisture Content: MC-19
D. All Framing, Blocking, Nailers, Grounds, and Furring:
   1. Lumber: K.D. D.F. #2 or better unless noted otherwise
   2. Sill Plates – P.T. H.F. #2 or better

2.03 ACCESSORIES

A. Fasteners and Anchors:
   1. Metal and Finish: Hot-dipped galvanized steel per ASTM A 153/A 153M for high humidity and preservative-treated wood locations, unfinished steel elsewhere.
B. Water-Resistive Barrier: No. 15 asphalt felt.

2.04 FACTORY WOOD TREATMENT

A. Treated Lumber and Plywood: Comply with requirements of AWPA U1 – Use Category System for wood treatments determined by use categories, expected service conditions, and specific applications.
   1. Preservative-Treated Wood: Provide lumber and plywood marked or stamped by an ALSC-accredited testing agency, cerifying level and type of treatment in accordance with AWPA standards.

B. Preservative Pressure Treatment of Lumber Above Grade: AWPA U1, Use Category UC3B, Commodity Specification A using waterborne preservative to 0.25 lb/cu ft retention.
   1. Kiln dry lumber after treatment to maximum moisture content of 9 percent.
   2. Treat lumber in contact with roofing, flashing, or waterproofing.
   3. Treat lumber in contact with concrete.
   4. Treat lumber as noted on plans.

C. Preservative Pressure Treatment of Lumber in Contact with Soil: AWPA U1, Use Category UC4A, Commodity Specification A using waterborne preservative to 0.4 lb/cu ft retention.

PART 3 EXECUTION

3.01 PREPARATION

A. Coordinate installation of rough carpentry members specified in other sections.

3.02 INSTALLATION – GENERAL

A. Select material sizes to minimize waste.
B. Reuse scrap to the greatest extent possible; clearly separate scrap for use on site as accessory components, including: shims, bracing, and blocking.
C. Where treated wood is used on interior, provide temporary ventilation during and immediately after installation sufficient to remove indoor air contaminants.

3.03 FRAMING INSTALLATION

A. Refer to General Structural Notes on drawings.
B. Set structural members level, plumb, and true to line. Discard pieces with defects that would lower required strength or result in unacceptable appearance of exposed members.
C. Make provisions for temporary construction loads, and provide temporary bracing sufficient to maintain structure in true alignment and safe condition until completion of erection and installation of permanent bracing.
D. Install structural members full length without splices unless otherwise specifically detailed.
E. Comply with member sizes, spacing, and configurations indicated, and fastener size and spacing indicated, but not less than required by applicable codes and AFPA Wood Frame Construction Manual.

F. Frame wall openings with two or more studs at each jamb; support headers on cripple studs.

3.04 BLOCKING, NAILERS, AND SUPPORTS

A. Provide framing and blocking members as indicated or as required to support finishes, fixtures, specialty items, and trim.
B. In framed assemblies that have concealed spaces, provide solid wood fire-blocking as required by applicable local code, to close concealed draft openings between floors and between top story and roof/attic space; other material acceptable to code authorities may be used in lieu of solid wood blocking.
C. In walls, provide blocking attached to studs as backing and support for wall-mounted items, unless item can be securely fastened to two or more studs or other method of support is explicitly indicated.
D. Where ceiling-mounting is indicated, provide blocking and supplementary supports above ceiling, unless other method of support is explicitly indicated.

3.05 ROOF-RELATED CARPENTRY

A. Coordinate installation of roofing carpentry with deck construction, framing of roof openings, and roofing assembly installation.

3.06 INSTALLATION OF CONSTRUCTION PANELS

A. Roof Sheathing: Secure panels with long dimension perpendicular to framing members, with ends staggered and over firm bearing.
   1. Nail panels to framing; staples are not permitted.
B. Wall Sheathing: Secure with long dimension perpendicular or parallel to wall studs, with ends over firm bearing and staggered, using nails. Staples are not permitted.
   1. Place water-resistive barrier horizontally over wall sheathing, weather lapping edges and ends.

3.07 SITE APPLIED WOOD TREATMENT

A. Apply preservative treatment compatible with factory applied treatment at site-sawn cuts, complying with manufacturer's instructions.
B. Allow preservative to dry prior to erecting members.

END OF SECTION

07 31 13 ASPHALT SHINGLES

PART 1 GENERAL

1.01 SECTION INCLUDES

A. Asphalt shingle roofing.
B. Flexible sheet membranes for underlayment and valley protection.
C. Associated metal flashings and accessories, including vents.

1.02 RELATED REQUIREMENTS

A. Section 061000 – Rough Carpentry: Roof sheathing

1.03 REFERNCE STANDARDS

A. ASTM D 1970 – Standard Specification for Self-Adhering Polymer Modified Bituminous Sheet Materials Used as Steep Roofing Underlayment for Ice Dam Protection; 2001.
B. ASTM D 3462 – Standard Specification for Ashpalt Shingles Made From Glass Felt and Surfaced With Mineral Granules; 2007
C. ASTM D 4586 – Standard Specification for Asphalt Roof Cement, Asbestos-Free; 2007.
D. NRCA MS104 – The NRCA Steep Roofing Manual; National Roofing Contractors Association; 2001, Fifth Edition, with interim updates.
E. SMACNA (ASMM) – Architecture Sheet Metal Manual; Sheet Metal and Air Conditioning Contractors' National Association; 2003.

1.04 SUBMITTALS

A. See Section 013300 – Administrative Requirements, for submittal procedures.
B. Product Data: Provide data including material characteristics, performance criteria and limitations.
C. Shop Drawings: For metal flashings, indicate specially configured metal flashings.
D. Samples: Submit two samples of each shingle color indicating color range and finish texture/pattern; for color selection.
E. Manufacturer's Certificate: Certify that products meet or exceed specified requirements.

1.05 QUALITY ASSURANCE

A. Perform Work in accordance with the recommendations of NRCA Steep Roofing Manual.

1.06 WARRANTY

A. Special Warranty: Submit a written warranty signed by manufacturer agreeing to repair or replace asphalt shingles that fail, including labor, within the specified warranty period. Failures include, but are not limited to, deformation or deterioration of asphalt shingles beyond normal weathering.
   1. Warranty Period: Manufacturer's standard warranty period, but not less than 40 years after the date of substantial completion.
   2.

PART 2 PRODUCTS

2.01 SHINGLES

A. Manufacturers:
   1. Atlas Roofing Corporation; Product Pinnacle 35: www.atlasroofing.com.
   2. GAF Materials Corporation; Product Timberline Prestique 30: www.gaf.com.
   3. IKO; Product Cambridge 30: www.iko.com.
   4. Owens Corning Corp.; Product Oakridge PRO AR Shingles: www.owenscorning.com.
   5. Substitutions: See Section 01600 – Product Requirements.
B. Asphalt Shingles: Asphalt-coated glass felt, mineral granule surfaced, complying with ASTM D 3462; Class A fire resistance.
   1. Self-sealing type

2. Color: to be selected from the manufacturer's standard color range.

2.02 SHEET MATERIALS

A. Underlayment: Non-perforated, No. 30, asphalt saturated felt complying with ASTM D 226 or ASTM D 4869.
B. Flexible Flashing: Self-adhering polymer-modified asphalt sheet complying with ASTM D 1970; 40 mil total thickness; with strippable treated release paper and polyethylene sheet top surface.
   1. Manufacturers:
      a. Grace Construction Products; Product Grace Ice and Water Shield.
      b. Substitutions: See Section 01600 – Product Requirements.

2.03 ACCESSORIES

A. Provide all accessories in accordance with the roof manufacturer recommendations.
B. Nails: Standard round wire shingle type, of hot-dipped zinc coated steel, minimum 3/8 inch head diameter and 0.105 inch shank diameter, 1-1/4 inch long.
C. Plastic Cement: ASTM D 4586, asphalt roof cement.

2.04 METAL FLASHINGS

A. Metal Flashings: Provide sheet metal eave edge, gable edge, ridge, ridge vents, chimney flashing and other flashings required for complete installation.
   1. Form flashings to protect roofing materials from physical damage and shed water.
   2. Form Sections square and accurate to profile, in maximum possible lengths, free from distortion or defects detrimental to appearance or performance.
   3. Hem exposed edges of flashing minimum 1/4 in. on underside.
B. Sheet Metal: Pre-finished aluminum, 0.016 inch thick; PVC coating, color as selected.

   Allowable Substitution: 24 gauge sheet metal prefinished with Kynar coating.

PART 3 EXECUTION

3.01 EXAMINATION

A. Verify existing conditions before starting work.
B. Verify that the deck is of sufficient thickness to accept fasteners.
C. Verify that roof penetrations and plumbing stacks are in place and flashed to deck surface.
D. Verify roof openings are correctly framed.

3.02 PREPARATION

A. Broom clean deck surfaces before installing underlayment or eave protection.

3.03 INSTALLATION – UNDERLAYMENT

A. Install underlayment perpendicular to slope of roof, with ends and edges weather lapped minimum 4 inches. Stagger end laps of each consecutive layer. Nail in place. Weather lap minimum 4 inches over eave protection.
B. Items projecting through or mounted on roof: Weather lap and seal watertight with plastic cement.

3.04 INSTALLATION – VALLEY PROTECTION

A. Install flexible flashing in accordance with manufacturer's instructions.
B. Weather lap joints minimum 2 inches.

3.05 INSTALLATION – METAL FLASHING AND ACCESSORIES

A. Install flashings in accordance with NRCA requirements and SMACNA Architectural Sheet Metal Manual requirements.
B. Weather lap joints minimum 2 inches and seal weather tight with plastic cement.
C. Items Projecting Through or Mounted on Roofing: Flash and seal weather tight with plastic cement.

3.06 INSTALLATION – SHINGLES

A. Install shingles in accordance with manufacturer's instructions.
   1. Fasten individual shingles using 2 nails per shingle, or as required by code, whichever is greater. Staples are not allowed.
   2. Fasten strip shingles using 4 nails per strip, or as required by code, whichever is greater. Staples are not allowed.
B. Place shingles in straight coursing pattern with 5 inch (standard) or 5-5/8 inch (metric) weather exposure to produce double thickness over full roof area. Provide double course of shingle at eaves.
C. Project first course of shingles 3/4 inch beyond fascia boards.
D. Extend shingles 1/2 inch beyond face of gable edge fascia boards.
E. Extend shingles on one slope across valley and fasten. Trim shingles from other slope 2 inches from valley center line to achieve closed cut valley concealing the valley protection.
F. Cap hips with individual shingles, maintaining 5 inch weather exposure. Place to avoid exposed nails.
G. Coordinate Installation of roof mounted components or work projecting through roof with weather tight placement of counter-flashings.
H. Complete installation to provide weather tight service.

3.07 PROTECTION

A. Do not permit traffic over finished roof surface.

END OF SECTION

09 21 00 GYPSUM BOARD ASSEMBLIES

PART 1 GENERAL

1.07 SECTION INCLUDES

D. Performance criteria for gypsum board assemblies.
E. Gypsum wallboard.
F. Joint treatment and accessories.
G. Textured finish system, including primer.

1.08 RELATED REQUIREMENTS

A. Section 061000 – Rough Carpentry: Building framing and sheathing.
B. Section 061000 – Rough Carpentry: Wood blocking product and execution requirements.

1.09 REFERNCE STANDARDS

F. ASTM C 36/C 36M – Standard Specification for Gypsum Wallboard; 2001.
G. ASTM C 475/C 475M – Standard Specification for Joint Compound and Joint Tape for Finishing Gypsum Board; 2002 (Reapproved 2007).
H. ASTM C 514 – Standard Specification for Nails for the Application of Gypsum Board; 2004.
I. ASTM C 557 – Standard Specification for Adhesives for Fastening Gypsum Wallboard to Wood Framing; 2003.
J. ASTM C 630/C 630M – Standard Specification for Water-Resistant Gypsum Backing Board; 2000.
K. ASTM C 840 – Standard Specification for Application and Finishing of Gypsum board; 2007.
L. ASTM C 1047 – Standard Specification for Accessories for Gypsum Wallboard and Gypsum Veneer Base; 2005.
M. ASTM C 1280 – Standard Specification for Application of Gypsum Sheathing; 2007.
N. ASTM C 1396/C 1396M – Standard Specification for Gypsum Board; 2006a.
O. GA-216 – Application and Finishing of Gypsum Board; Gypsum Association; 2007.
P. GA-253 – Recommended Specifications for the Application of Gypsum Sheathing; Gypsum Association; 1999.
Q. GA-600 – Fire Resistance Design Manual; Gypsum Association; 2006.
R. UL (FRD) – Fire Resistance Directory; Underwriters Laboratories Inc.; current edition.

1.10 SUBMITTALS

a. See Section 01300 – Administrative Requirements, for submittal procedures.
b. Product Data: Provide data on gypsum board, accessories, joint finishing system, accessories, and joint finishing system.
c. Product Data: Provide certification of product compliance with the rated assemblies listed on Drawings.

1.11 QUALITY ASSURANCE

F. Perform in accordance with ASTM C 840. Comply with requirements of GA-600 for fire-rated assemblies.
G. Installer Qualifications: Company specializing in performing gypsum board application and finishing, with minimum 3 years of documented experience.

1.12 REGULATORY REQUIREMENTS

A. Conform to applicable code for fire rated assemblies as indicated on drawings.
   i. Where specific product proposed is not included within listed products for UL listed assembly noted on Drawings, provide documentation to show equal fire rating for similar assembly incorporating proposed product.

PART 2 PRODUCTS

2.02 GYPSUM BOARD ASSEMBLIES

C. Provide complete assemblies complying with ASTM C 840 and GA-216.

2.05 BOARD MATERIALS

A. Manufacturers – Gypsum-Based Board:
   1. Georgia-Pacific Gypsum LLC: www.gp.com/gypsum.
   2. National Gypsum Company: www.nationalgypsum.com.
   3. USG Corporation: www.usg.com.
   4. Substitutions: See Section 01600 – Product Requirements.
B. Gypsum Board – All Types: Complying with applicable requirements of ASTM C 1396/C 1396M.
C. Standard Gypsum Wallboard: Sizes to minimize joints in place; ends square cut.
   1. Core Type: Type X
   2. Thickness: 5/8 inch for ceilings, 1/2 inch for walls, unless otherwise noted on plans.
   3. Edges: Tapered.

2.06 ACCESSORIES

A. Acoustic Insulation: As specified in Section 072100.
B. Acoustic Sealant: Non-hardening, non-skinning, for use in conjunction with gypsum board.
C. Water-Resistive Barrier: No. 15 asphalt felt.
D. Resilient Furring Channels: 1/2 inch depth, for attachments to substrate through one leg only.
   1. Manufacturers – Resilient Furring Channels:
      a. Phillips Manufacturing Co, Product RC-1 Tru 25: www.phillipsmfg.com.
      b. Substitutions: See Section 01600 – Product Requirements.
E. Finishing Accessories: ASTM C 1047, galvanized steel or rolled zinc, unless otherwise indicated.
   1. Types: As detailed or required for finished appearance.
F. Corner Beads: Galvanized steel.
G. Edge Trim: Bead types required for complete installation.
H. Joint Materials: ASTM C 475 and as recommended by gypsum board manufacturer for project conditions.
I. Textured Finish Materials: Latex-based compound; plain.
   1. Primer: Product designed for use as primer/sealer for gypsum board.
J. Nails for Attachment to Wood Members: ASTM C 514.
K. Adhesive for Attachment to Wood: ASTM C 557.

PART 3 EXECUTION

3.01 EXAMINATION

A. Verify that project conditions are appropriate for work of this section to commence.

3.08 ACOUSTIC ACCESSORIES INSTALLATION

C. Acoustic Insulation: Place tightly within spaces, around cut openings, behind and around electrical and mechanical items within partitions, and tight to items passing through partitions.
D. Acoustic Sealant: Install in accordance with manufacturer's specifications.
   1. Place one bead continuously on substrate before installation of perimeter framing members.
   2. Place continuous bead at perimeter of each layer of gypsum board.
   3. In non-fire-rated construction, seal around all penetrations by conduit, pipe, ducts and rough-in boxes.

3.09 BOARD INSTALLATION

B. Comply with ASTM C 840. Install to minimize butt end joints, especially in highly visible locations.
C. Comply with fire rating assembly details noted on drawings.
D. Single-Layer Fire-Rated: Install gypsum board vertically, with edges and ends occurring over firm bearing.
E. Fire-Rated Construction: Install gypsum board in strict compliance with requirements of assembly listing.
F. Exterior Sheathing: Comply with ASTM C 1820. Install sheathing vertically, with edges butted tight and ends occurring over firm bearings.
   1. Immediately after installation, protect from weather by application sheathing membrane specified in section 072600
G. Installation on Wood Framing: For rated assemblies, comply with requirements of listing authority. For non-rated assemblies, install as follows:
   1. Single-Layer Applications: Adhesive applications.
   2. Double-Layer Applications: Install base layer using screws or nails. Install face layer using adhesive.

H. Moisture Protection: Treat cut edges and holes in moisture resistant gypsum board and exterior gypsum soffit board with sealant.

3.10 INSTALLATION OF TRIM AND ACCESSORIES

A. Corner Beads: Install at external corners, using longest practical lengths.
B. Edge Trim: Install at locations where gypsum board abuts dissimilar materials.

3.11 JOINT TREATMENT

A. Finish gypsum board in accordance with levels defined in ASTM C 840, as follows:
   1. Level 3: Walls to receive textured wall finish.
   2. Level 1: Fire rated wall areas above finished ceilings, whether or not accessible in the completed construction.
B. Finish gypsum board in scheduled areas in accordance with levels defined in ASTM C 840 and as scheduled below.
C. Tape, fill and sand exposed joints, edges and corners to produce smooth surface ready to receive finishes.
   1. Feather coats of joint compound so that camber is maximum 1/32 inch.
   2. Taping, filling and sanding are not required at surfaces behind fixed cabinetry.
   3. Taping, filling and sanding are not required at base layer of double applications.

3.12 TEXTURE FINISH

A. Apply finish texture coating by means of spraying apparatus in accordance with manufacturer's instructions.
B. Texture Required: light orange peel – provide sample for approval prior to proceeding with the work.
C. Apply primer to gypsum board prior to application of texture finish.
D. Texture finish to be light orange peel.

3.13 TOLERANCES

A. Maximum Variations of Finished Gypsum Board Surfaces from True Flatness: 1/8 inch in 10 feet in any direction.

3.14 FINISH LEVEL SCHEDULE

A. Provide the following level of finish for all interior exposed gypsum board finishes.
   1. Level 3: Walls scheduled to receive textured wall finish. Provide Level 3 finish at all walls and ceilings prior to application of texture finish.
B. Install moisture-resistant gypsum board, as specified above, at all surfaces of bathrooms, restrooms, janitor rooms, and laundry rooms.

END OF SECTION

09 90 00 PAINTS AND COATINGS

PART 1 GENERAL

1.13 SECTION INCLUDES

H. Surface preparation.
I. Field application of paints, stains and other coatings.
J. Surfaces to be finished are indicated in this section and on the Drawings.

1.14 REFERNCE STANDARDS

S. 40 CFR 59, Subpart D – National Volatile Organic Compound Emission Standards for Architectural Coatings; U.S. Environmental Protection Agency; current edition.
T. MPI (APL) – Master Painters Institute Approved Products List; Master Painters and Decorators Association; current edition, www.paintinfo.com.
U. MPI (APSM) Master Painters Institute Architectural Painting Specification Manual; Master Painters and Decorators Association; 2004.

1.15 SUBMITTALS

a. See Section 01300 – Administrative Requirements, for submittal procedures.
b. Product Data: Provide complete list of all products to be used, with the following information for each:
  i. Manufacturer's name, product name and/or catalog number, and general product category (e.g. "alkyd enamel").
  ii. MPI product number (e.g. MPI #47).
  iii. Cross-reference to specified paint system(s) product is to be used in; include description of each system (copy of relevant MPI Manual page is acceptable).
  iv. Manufacturer's Installation instructions.
  v. If proposal of substitutions is allowed under submittal procedures, explanation of all substitutions proposed.
c. Certification by manufacturer that products comply with Contract Documents and are compatible with applicable substrates and with each other.
d. Certification: By manufacturer that all paints and coatings comply with VOC limits specified.
e. Samples: Submit two paper "drop" samples, 8-1/2 by 11 inches in size, illustrating range of colors available for each finishing product specified.
  i. Where sheen is specified, submit samples in only that sheen.
  ii. Where sheen is not specified, submit each color in each sheen available.
  iii. Paint color submittals will not be considered until color submittals for major materials not to be painted, such as factory finished metals, wood doors and manufactured casework, have been approved.
f. Maintenance Data: Submit data on cleaning, touch-up and repair of painted and coated surfaces.

1.16 QUALITY ASSURANCE

H. Applicator Qualifications: Company specializing in performing the work of this section with minimum 5 years experience.
I. Material Safety Data Sheets: At project site, maintain file of MSDS sheets for each product used; become familiar with and follow manufacturer's stated application and safety requirements.

1.17 DELIVERY, STORAGE AND PROTECTION

A. Deliver products to site in sealed and labeled containers; inspect to verify acceptability.
B. Container Label: Include manufacturer's name, type of paint, brand name, lot number, brand code, coverage, surface preparation, drying time, cleanup requirements, color designation and instructions for mixing and reducing.
C. Paint Materials: Store at minimum ambient temperature of 45 degrees F and a maximum of 90 degrees F, in ventilated area, and as required by manufacturer's instructions.

1.18 FIELD CONDITIONS

A. Do not apply materials when surface and ambient temperatures are outside the temperature ranges required by the paint product manufacturer.
B. Follow manufacturer's recommended procedures fro producing best results, including testing of substrates, moisture in substrates, and humidity and temperature limitations.
C. Do not apply exterior coatings during rain or snow, or when relative humidity is outside the humidity ranges required by the paint product manufacturer.
D. Minimum Application Temperatures for Latex Paints: 45 degrees F for interiors; 50 degrees F for exterior; unless required otherwise by manufacturer's instruction.
E. Provide lighting level of 80 ft. candles measured mid-height at substrate surface.

1.19 EXTRA MATERIALS

A. See Section 01600 – Product Requirements, for additional provisions.
B. Supply 1 gallon of each color; store where directed.
C. Label each container with color, type, and room locations in addition to the manufacturer's label.

PART 2 PRODUCTS

2.03 MANUFATURERS

D. Paints and Coatings: Any manufacturer listed in MPI Approved Products List (at www.paintinfo.com) under applicable MPI product reference number, unless otherwise indicated.
E. Provide all paint and coating products from the same manufacturer to the greatest extent possible.
F. In the event that a single manufacturer cannot provide all specified products, minor exceptions will be permitted provided approval by architect is obtained using the specified procedures for substitutions.
    1. Substitution of MPI-approved products by a different manufacturer is preferred over substitution of unapproved products by the same manufacturer.
    2. Substitution of a different system using MPI-approved products by the same manufacturer will be considered
G. Substitutions: See Section 01600 – Product Requirements.

2.07 MATERIALS - GENERAL

D. Paints and Coatings: Where MPI product numbers are specified provide products listed in Master Painters Institute Approved Products List, current edition available at www.paintinfo.com, for specified MPI Categories, except as otherwise indicated.
    1. Provide products complying with regulatory requirements for volatile organic compound (VOC) content in force in jurisdiction where project is located.
    2. Provide ready mixed paints and coatings, except field-catalyzed coatings.
    3. Provide materials that are compatible with one another and the substrates indicated under conditions of service and application, as demonstrated by manufacturer based on testing and field experience.
E. Interior Paints: Provide interior paints that are Green Seal Certified and labeled as such; www.greenseal.org.
F. Accessory Materials: Linseed oil, shellac, turpentine, paint thinners and other materials not specifically indicated but required to achieve finishes specified; commercial quality.
G. Patching Material: Latex filler.
H. Fastener Head Cover Material: Latex filler.

2.08 PAINT SYSTEMS

L. Provide Custom Grade systems (1 top coat) as defined in MPI Architectural Painting Specifications Manual, except as otherwise indicated.
M. Where a specified paint system does not have a Custom Grade, provide Premium Grade system.
N. Where sheen is not specified or more than one sheen is specified, sheen will be selected later by Owner from the manufacturer's full line.
O. Provide colors as directed by Architect.
    1. Allow for minimum of four colors for each system, unless otherwise indicated, without additional cost to Owner.
    2. Extend colors to surface edges; colors may change at any edge as directed by Owner.

2.09 EXTERIOR PAINT SYSTEMS

A. Asphalt Paving Markings:
   1. EXT 2.1A Latex Zone/Traffic Marking: MPI #97.
B. Concrete Vertical Structures:
   1. Water repellent specified in Section 071900.
C. Structural and Metal Fabrications:
   1. Applications include but are not limited to doors, frames, miscellaneous metal boxes, covers, railings and deck support structure.
   2. EXT 5.1C W.B. Light Industrial Coating: Alkyd Metal Primer MPI #79, W.B. Light Industrial Coating MPI #110, gloss level 5.
D. Steel Subject to High Temperature:
   1. EXT 5.2A Heat Resistant Enamel: Heat Resistant Enamel MPI #21, gloss.
E. Galvanized Metal, Not Chromate Passivated:
   1. EXT 5.3G W.B. Light Industrial Coating: Cementitious Primer MPI #26, W.B. Light Industrial Coating MPI #110, gloss level 5.
F. Dressed Lumber:
   1. Applications include but are not limited to doors, casings, battens, smooth fascia, trim, and wood and panel siding (including battens).
   2. EXT 6.3A Latex: Oil/Alkyd Primer MPI #5 or #7, Latex MPI #10, 11 or 119.
G. Plastic (ABS, PVC and PVA):
   1. Applications include but are not limited to plastic fabrications.
   2. EXT 6.8A Latex: Bonding Primer MPI #17 or 69, Latex MPI #10, 11 or 119.
H. Bituminous Coated Surfaces:
   1. EXT 10.2A Latex: Rust Inhibitive Primer MPI #107, Latex MPI #10, 11 or 119.

2.10 INTERIOR PAINT SYSTEMS

A. Interior painting to be completed by Owner. Contractor to provide and install PVA primer as required by specifications.

PART 3 EXECUTION

3.01 SCOPE – SURFACES TO BE FINISHED

B. Paint all exposed surfaces except where indicated not to be painted or to remain natural; the term “exposed” includes areas visible through permanent and built-in fixtures when they are in place.
C. Paint the surface described in PART 2, indicated on Drawings, and as follows:
   1. If a surface, material or item is not specifically mentioned, paint in the same manner as similar surfaces, materials, or items, regardless of whether colors are indicated or not.
   2. Paint surfaces behind moveable equipment and furnishings the same as similar exposed surfaces.
   3. Paint surfaces to be concealed behind permanently installed fixtures, equipment and furnishings, using primer only, prior to the installation of the permanent item.
   4. Paint back sides of access panels and removable and hinged covers to match exposed surfaces.
   5. Finish top, bottom and sides of exterior doors the same as exposed faces.
   6. Paint all insulated and exposed pipes, conduit boxes, insulated and exposed ducts, hangers, brackets, collars and supports, mechanical equipment and electrical equipment occurring in finished areas to match background surface, unless otherwise indicated.
   7. Remove unfinished louvers, grilles, covers, and access panels on mechanical and electrical components and paint separately.
   8. Paint both sides and edges of plywood backboards for electrical and telephone equipment before installing equipment.
D. Do Not Paint or Finish the Following Items.
   1. Items fully factory-finished unless specifically noted; factory-primed items are not considered factory-finished.
   2. Items indicated to receive other finish.
   3. Items indicated to remain naturally finished.
   4. Fire rating labels, equipment serial number and capacity labels, and operating parts of equipment.
   5. Anodized aluminum.

6. Polished or brushed stainless steel items.
7. Brick, precast concrete, integrally colored plaster.
8. Polished and brushed stainless steel, anodized aluminum, bronze, terne and lead.
9. Acoustic materials.
10. Concealed piping, ductwork, and conduit.

3.15 EXAMINATION

E. Verify that surfaces are ready to receive work as instructed by the product manufacturer.
F. Examine surfaces scheduled to be finished prior to commencement of work. Report any condition that may potentially affect proper application.
G. Test shop-applied primer for compatibility with subsequent cover materials; report incompatible primer conditions and submit recommended changes for Engineer's approval.
H. Measure moisture content of surfaces using an electronic moisture meter. Do not apply finishes unless moisture content of surfaces are below the following maximums:
   1. Masonry, Concrete and Concrete Unit Masonry: 12 percent.
   2. Exterior Wood: 15 percent, measured in accordance with ASTM D 4442.
I. Measure the pH factor of concrete, masonry and mortar before starting any finishing process, using the method specified in MPI Architectural Painting Manual.
   1. Report results in writing to Engineer before starting work.
   2. If results of test indicate need for remedial action, provide written description of remedial action. If a different primer or paint system is required, state the total cost of the change. Do not proceed with remedial action or change without receiving written authorization from Engineer.

3.16 PREPARATION

I. Prepare surfaces as specified in MPI Architectural Painting Specification Manual and as follows for the applicable surface and coating; if multiple preparation treatments are specified, use as many as necessary for best results; where the Manual references external standards for preparation (e.g. SSPC standards), prepare as specified in those standards; comply with coating manufacturer's specific preparation methods or treatments, if any.
J. Coordinate painting work with cleaning and preparation work so that dust and other contaminants do not fall on newly painted, wet surfaces.
K. Surface Appurtenances: Prior to preparing surfaces or finishing, remove electrical plates, hardware, light fixtures, light fixture trim, escutcheons, machined surfaces, fittings and similar items already installed that are not to be painted.
   1. If removal is impractical or impossible because of size or weight of the item, provide surface-applied protection before preparation and finishing.
   2. After completing painting in each space or area, reinstall items removed using workers skilled in the trades involved.
L. Surfaces: Correct defects and clean surfaces which affect work of this section. Remove or repair existing coatings that exhibit surface defects.
M. Marks: Seal with shellac those which may bleed through surface finishes.
N. Impervious surfaces: Remove mildew by scrubbing with solution of tetra-sodium phosphate and bleach. Rinse with clean water and allow surface to dry.
O. Concrete, Cement Plaster and Unit Masonry Surfaces to be Painted: Remove dirt, loose mortar, scale, salt or alkali powder, and other foreign matter. Remove oil and grease with a solution of tri-sodium phosphate; rinse well and allow todry. Remove stains caused by weathering of corroding metals with a solution of sodium metasilicate after thoroughly wetting with water. Allow to dry.
P. Asphalt, Creosote or Bituminous Surfaces to be Painted: Remove foreign particles to permit adhesion of finishing materials. Apply latex based sealer or primer.
Q. Galvanized Surfaces to be Painted: Remove surface contamination and oils and wash with solvent. Apply coat of etching primer.
   1. Clean galvanized surfaces with nonpetroleum-based solvents so surface is free of oil and surface contaminants. Remove pretreatment from galvanized sheet metal fabricated from coil stock by mechanical or chemical methods as recommended as best practice by primer manufacturer.
R. Uncoated Steel and Iron Surfaces to be Painted: Remove grease, mill scale, weld splatter, dirt and rust. Where heavy coatings of scale are evident, remove by hand wire brushing or sandblasting; clean by washing with solvent. Apply a treatment of phosphoric acid solution, ensuring weld joints, bolts, and nuts

are similarly cleaned. Prime paint entire surface; spot prime after repairs.

1. Use solvent or mechanical cleaning methods that comply with the Steel Structures Painting Council's (SSPC) recommendations. Touch up bare areas and shop-applied prime coats that have been damaged. Wire-brush, clean with solvents recommended by paint manufacturer, and touch up with the same primer as the shop coat.

S. Shop-Primed Steel Surfaces to be Finish Painted: Sand and scrape to remove loose primer and rust. Feather edges to make touch-up patches inconspicuous. Clean surfaces with solvent. Prime bare steel surfaces. Re-prime entire shop-primed item.

T. Exterior Wood to Receive Opaque Finish: Remove dust, grit and foreign matter. Seal knots, pitch streaks and sappy sections. Fill nail holes with tinted exterior caulking compound after prime coat has been applied. Back prime concealed surfaces before installation.

U. Metal Doors to be Painted: Prime metal door top and bottom edge surface.

3.17 APPLICATION

C. Apply products in accordance with manufacturer's instructions and as specified or recommended by MPI Manual, using the preparation, products, sheens, textures and colors as indicated.
   1. Provide completed work matching approved samples for color, texture and coverage.
   2. Remove, refinish or repaint work not complying with requirements.

D. Do not apply finishes over dirt, rust, scale, grease, moisture, scuffed surfaces or other conditions detrimental to formation of a durable coating film; do not apply finishes to surfaces that are not dry.

E. Use applicators and methods best suited for substrate and the type of material applied and according to manufacturer's instructions.
   1. Brush Application: Use brushes best suited for the type of material applied; use brush of appropriate size for the surface or item being painted; produce results free of visible brush marks.
   2. Roller Application. Use rollers of carpet, velvet back or high-pile sheep's wool as recommended by manufacturer for material and texture required.
   3. Spray Application: Use airless spray equipment with orifice size as recommended by manufacturer for material and texture required.
   4. Where application method is listed in the MPI Manual for the paint system that application method is required; otherwise any application method recommended by manufacturer for material used and objects to be painted is acceptable.

F. Minimum Coating Thickness: Apply paint materials no thinner than the manufacturer's recommended spreading rate; provide total dry film thickness of entire system as recommended by manufacturer.
   1. Number of coats and film thickness required are the same regardless of application method.
   2. If undercoats, stains or other conditions show through final coat of paint, apply additional coats until paint film is of uniform finish, color and appearance.
   3. Give special attention to ensure edges, corners, crevices, welds and exposed fasteners receive dry film thickness equivalent to that of flat surfaces.

G. Apply finish to completely cover surfaces with uniform appearance without brush marks, runs, sags, laps, ropiness, holidays, spotting, cloudiness or other surface imperfections.
   1. Before applying finish coats, apply a prime coat of material recommended by manufacturer, unless the surface has been prime coated by others; where evidence of suction spots or unsealed areas in first coat appear, recoat primed and sealed surfaces to ensure finish coat with no burn through or other defects due to insufficient sealing.
   2. Apply first coat to surface that has been cleaned, pretreated, or otherwise prepared as soon as practical after preparation and before subsequent surface deterioration.
   3. Do not apply succeeding coats until the previous coat has cured as recommended by manufacturer.
   4. Do no recoat until paint has dried to where it feels firm, does not deform or feel sticky under moderate thumb pressure, and application of another coat will not cause the undercoat to lift or lose adhesion.
   5. If manufacturer's instructions recommend sanding to produce a smooth even surface, sand between coats.
   6. Before applying next coat, vacuum clean surfaces of loose particles. Use tack cloth to remove dust and particles just prior to applying next coat.
   7. Pigmented (Opaque) Finishes: Provide smooth, opaque surface of uniform finish, color, appearance and coverage.

3.18 CLEANING AND PROTECTION

D. Collect waste material which may constitute a fire hazard, place in closed metal containers, and remove daily from site.
E. At the end of each workday, remove empty cans, rags, rubbish and other discarded paint materials from site.
F. Protect other work, whether being painted or not, against damage by painting. Correct damage by cleaning, repairing or replacing and repainting as approve by the Engineer.
G. Provide “Wet Paint” signs to protect newly painted finishes. Remove temporary protective wrappings provided by others to protect their work after completing painting operations.
H. At completion of construction activities of other trades, touch up and restore damaged or defaced painted surfaces. Comply with procedures specified in MPI Manual.

END OF SECTION

20 00 00 GENERAL MECHANICAL REQUIREMENTS

PART 1 GENERAL

1.01 SECTION INCLUDES

A. The work of Division 20 consists of providing labor and products, and of performing all work required for the complete operating installation of all mechanical systems as shown and specified, in strict accordance with this and all sections of these specifications, applicable drawings, terms, and conditions of the contract, and all applicable codes and ordinances governing installation of the various mechanical systems. Coordinate all work fully with the work of other crafts. Provide all systems complete and in proper operating order. This section of Division 20 is a part of all other sections of Division 20.

B. The scope of work for this project includes but is not limited to the following:
   1. Drains and sewer piping
   2. Hose bibs
   3. Heating
   4. Relocating existing exterior water line and installation of check valves in accordance plans and requirements of Clallam County P.U.D. requirements.
   5. Installation of new water service, meter, and check valves in accordance with plans and requirements of Clallam County P.U.D. requirements.

1.02 DIAGRAMMATIC DRAWINGS

A. Drawings and specifications are complimentary, each to the other; what is shown on one is as binding as if called for in both.

B. The drawings are diagrammatic in nature and do not show exact locations of piping, ducting, etc. Also, the drawings do not necessarily show in detail all features of the installation. However, a complete and satisfactorily working installation shall be provided.

C. If there appears to be insufficient space to install the mechanical work as shown, with adequate maintenance and service clearances, the Engineer shall be notified prior to proceeding with the work. Failure to comply with this requirement will be considered sufficient cause to require altering the work, at no additional cost to the contract, as directed by the Engineer.

1.04 CODES, PERMITS, STANDARDS, INSPECTIONS AND FEES

A. All materials furnished and all work installed shall comply with the current versions of the National Fire Codes of the National Fire Protection Association, International Building Code, International Mechanical Code, Uniform Plumbing Code, Federal, State and Local Standards, Washington State Non-Residential Energy Code, with the requirements of local utility companies, and with the requirements of all governmental agencies and departments having jurisdiction.

B. All materials and equipment for the electrical portion of the mechanical systems shall bear the approval label, or shall be listed by the Underwriters' Laboratories, Inc.

C. The contractor shall give all necessary notices, obtain all permits and pay all government sales taxes, fees, and other costs in connection with his work; file all necessary plans, arrange for necessary inspections, prepare all documents and obtain all necessary approvals of all governmental departments having jurisdiction; obtain all required certificates of inspection for his work, and deliver one copy of the same before request for acceptance and final payment for work.

D. The contractor shall include in the work, without extra cost, any labor, materials, services, apparatus, drawings, in order to comply with all applicable laws, ordinances, rules and regulations.

E. Nothing in the drawings or specifications shall be construed as directing or permitting work that is not fully in conformance with Codes and Regulations.

F. Where the Drawings or Specifications indicate materials or construction which exceeds the quality or size required by Codes and Regulations, the provisions of the Drawings or Specifications take precedence over the requirements of the Codes and Regulations.

G. Any variance from code requirements shall be promptly reported to the Engineer. Nor work shall be installed which is not in accordance with the Codes and Regulations.

1.05 SUBMITTALS

A. Provide manufacturers' data on manufactured products showing compliance with specified requirements and Codes.
B. Provide drawings as necessary for review and approval by the Clallam County Building Department to show compliance with applicable Codes. Plans shall include location, size and elevation of ductwork, seismic bracing, grilles, diffusers, HVAC equipment, equipment bases and stands, and any access doors in ceilings and walls.
C. Provide completed Washington State Non-Residential Energy Code Mechanical Summary forms for review by the Clallam County Building Department.

1.06 QUALITY ASSURANCE

A. Follow all manufacturer recommendations for handling and installing pipe and equipment.
B. All pipes and structures of the same style or type shall be furnished by a single manufacturer.

PART 2 PRODUCTS

NOT USED

PART 3 EXECUTION

3.01 COORDINATION AND COOPERATION WITH OTHER TRADES

A. The mechanical contractor and all sub-contractors shall coordinate the work so that the finished systems are complete, fully functional, accessible, in compliance with Codes and regulations, and in compliance with the plans and specifications.
B. The Contractor shall give full cooperation to other trades and shall furnish in writing to the other contractors, any information necessary to permit the work of all trades to be installed satisfactorily, with the least possible interference or delay, and with maximum headroom and clearance.
C. The Contractor shall furnish to other trades, as required, all necessary templates, patterns, setting plans, and shop details for the proper installation of work and for the purpose of coordinating adjacent work.

3.02 PROTECTION

A. The Contractor shall protect all work and materials from damage by his work or workmen, and shall be liable for all damages thus caused.
B. The Contractor shall be responsible for work and equipment until finally inspected, tested, and accepted; he shall protect work against theft, injury or damage; and shall carefully store material and equipment received on site that are not immediately installed. He shall close open ends of work with temporary covers or plugs during storage and construction to prevent entry of obstructing material.
C. Cover and seal all openings in piping, ductwork and equipment during construction to prevent against contamination from dirt and debris.

3.03 SCAFFOLDING, RIGGING, HOISTING

A. The Contractor shall furnish all scaffolding, rigging, hoisting, man lifts, and services necessary for erection and delivery into the premises of any equipment and apparatus furnished. Remove same from premises when no longer required.

3.04 ELECTRICAL WORK

A. The Electrical Contractor is responsible for providing motor starters and motor circuit protective devises for equipment included in Division 20 unless the starters are supplied as an integral part of the equipment or as specified otherwise.
B. Electrical characteristics for all mechanical equipment connections shall be coordinated by the Mechanical Contractor with the Electrical Contractor prior to assembling submittals or ordering equipment. Electrical components provided with the mechanical equipment shall be compatible with the electrical services to which they are to be connected.
C. Installation and coordination of electrical connections to mechanical equipment, including power sources for electronic temperature control systems and including wiring of fire sprinkler components to the fire alarm

systems, wiring for electronically-activated plumbing trim, wiring of smoke-fire damper components, wiring of duct-mounted smoke detectors, and wiring between mechanical equipment and control panels, controlling devices or control devices, shall be the responsibility of the Mechanical Contractor.

D. The Electrical Contractor is responsible for providing power outlet boxes for each piece of equipment, installing electrical devices and connecting them to the equipment.
E. Electrical components provided with the mechanical equipment shall be compatible with the electrical services to which they are to be connected.
F. Interconnecting wiring between components of Mechanical equipment, when the wiring is not a part of the power wiring to the equipment, shall be provided by the Mechanical Contractor and the Mechanical Contractor is responsible for any required permits to perform this work. All necessary auxiliary devices, such as transformers, switches, contactors and relays, shall be provided by the Mechanical Contractor.
G. All control equipment and wiring, interlock wiring between components, and control sequences shall be provided so that the equipment, including auxiliary devices, operates correctly and completely under all sequences.

3.05 EXCAVATION AND BACKFILLING

A. Mass excavation to approximate building levels will be done by the General Contractor. Mechanical Contractor shall, however, do all trenching and pit excavation and backfilling required for mechanical work inside and outside the building, including repairing of finished surfaces, and required shoring, bracing, pumping, and all protection for safety of persons and property. Mechanical Contractor shall remove all excess earth from the site, as directed by the Engineer, or to a storage point on the site as directed by the Engineer. Local or State Safety Codes shall be strictly observed. In addition, it shall be the responsibility of the Contractor to check the indicated elevations of the utilities entering and leaving the building.
B. Filling, backfilling, and Compaction shall be in accordance with the requirements of the Specifications.

3.06 MATERIAL AND WORKMANSHIP

A. All materials and apparatus required for the work shall be new, of first-class quality, and shall be furnished, delivered, erected, connected and finished in every detail, and shall be so selected and arranged as to fit properly into the building spaces. Where no specific kind or quality of material is given, a first-class standard article as approved by the Engineer shall be provided.

3.07 INSTALLATION

A. Cutting and Patching: Keep cutting and patching to a minimum. If required, all patching shall conform to specifications for the new General Construction work. Finish to match existing work. Conform to Division 1.
B. Measurements: Verify space availability by field measurement prior to installation.
C. Roughing-In Dimensions: Obtain roughing-in dimensions for equipment from approved shop drawings or actual equipment measurements.
D. Manufacturer's Installation Instructions: Follow manufacturer's written instructions where furnished.
E. Accessibility: Install all equipment that requires periodic servicing or repairs so that it is readily accessible.
F. Provisions for Light Fixtures: In installing piping and ductwork, allow clearance for light fixtures. If interferences occur, move the piping or ducts, and, if not possible, notify the Engineer.
G. Delivery, Storage, and Handling.
    1. Handle, store and protect equipment and materials to prevent damage before and during installation in accordance with the manufacturer's recommendations. Replace damaged or defective items.
    2. Factory finished equipment that is damaged shall be refinished as required to bring the equipment to a like-new condition in accordance with manufacturer's recommendations. If, in the opinion of the Engineer, the equipment cannot be satisfactorily repaired, the equipment shall be replaced.

3.08 TESTING AND DEMONSTRATION

A. Perform all tests required by Codes and Ordinances. Engineer shall be notified of scheduled testing. Give sufficient notice before performing such tests.
B. Additional tests shall be performed as required in other sections of the specifications.
C. Systems Operation Demonstration: Subject systems to such operating tests as are required to

demonstrate that the equipment installed will operate within the specified limits through normal ranges and sequences including simulation of possible abnormal conditions. Operate every device manually and automatically, in accordance with its purpose. If test to do not demonstrate satisfactory system performance, correct deficiencies and retest systems.

D. If the work is completed during the heating season, perform final tests of cooling equipment the following summer. If completed during summer, perform test of heating system the following winter.
E. Operation of Equipment and Systems: Contractor is responsible during all periods of balancing and testing.
F. Provide all equipment, instruments, personnel and supplies required to conduct all tests.

3.09 COMMISSIONING

A. The Contractor shall provide all labor and materials as required to commission all systems in accordance with required codes including the Washington State Non-Residential Energy Code and provide commissioning documents to the Owner and Building Department.

3.10 OPERATING AND MAINTENANCE INSTRUCTIONS AND MANUALS

A. Prepare three copies of an Operating and Maintenance Manual for all equipment provided under Division 20 in accordance with the requirements of Division 1.
   1. Operation and Maintenance Manuals shall include operating information, maintenance information, control information, parts lists, filter information, where applicable, lubrication information and exploded view diagrams when applicable.
   2. Information shall be arranged in an orderly manor.
   3. The manuals shall include Testing and Balancing Reports.
   4. O and M Manuals shall be provided prior to requesting final payment.

3.11 INSTRUCTION PERIOD FOR OWNER'S PERSONNEL

A. Following the installation of all mechanical equipment and prior to acceptance of the mechanical work, conduct demonstrations and instruction periods for an Owner's representative to point out the location of servicing points and required points of maintenance. They shall explain maintenance requirements, access methods, servicing requirements, access methods, equipment cleaning procedures, temperature control settings and adjustment locations.

3.12 GUARANTEES AND WARRANTIES

A. Submit written copies of all guarantees and warranties prior to requesting final payment.

3.13 COMPLETION OF WORK

A. When requesting final inspection, give ten days notice. Submit written certification that the work has been fully completed in strict accordance with plans, specifications and appropriate Codes.

3.14 INSPECTION

A. Provide proof of final inspection by the Builidng Department.

3.15 PROJECT FINALIZATION AND START-UP

A. Upon completion of the equipment and systems installation and connections, the Contractor assembles all personnel necessary for system start-up. These individuals shall assist in start-up and check out of their systems and shall remain at the site until the system operation is acceptable and understood by the Owner's maintenance and/or operation personnel.

END OF SECTION

22 00 00 GENERAL PLUMBING REQUIREMENTS

PART 1 GENERAL

1.01 SUMMARY

A. Specification requirements defined in Division 20 of this Specification apply to, and are in addition to the work associated with equipment, systems, materials, and installation requirements specified in Division 22. Contractor shall provide the requirements specified in Division 20 to obtain complete systems, tested, adjusted and ready for operation. Contractor responsible for proper sizing of plumbing vents, drains, and supply lines in conformance with applicable Codes.

1.02 RELATED WORK SPECIFIED IN OTHER SECTIONS

A. Provisions of the Bidding Requirements and Conditions of the Contract and Division 1 apply to all Sections of Division 22.
B. Refer to other applicable sections of these specifications for related work.

PART 2 PRODUCTS

NOT USED

PART 3 EXECUTION

NOT USED

END OF SECTION

26 00 00 ELECTRICAL – GENERAL

PART 1 GENERAL

1.01 SUMMARY

A. Work included in this section: Provide all electrical work, labor, materials and equipment as necessary for complete operable systems, etc. as shown on drawings and as specified herein including all items that are not specifically shown or stated but that are required for a complete, working installation.
B. Related Work Specified in Other Sections: Provisions of the Bidding Requirements and Conditions of the Contract and Division 1 apply to all Sections of Division 26.
C. Refer to other applicable sections of these specifications for related work.

1.02 STANDARDS AND CODES

A. If any conflict occurs between legally adopted codes and this specification, the codes are to prevail; this shall not be construed as relieving the Contractor from complying with any requirements of the plans or specifications which may be in excess of code requirements and not contrary to same.
B. All materials and equipment installed, including lighting fixtures, shall have been tested and listed by Underwriters' Laboratories (or other code recognized laboratory) unless otherwise permitted by the authorized code inspector and the Engineer.
C. All electrical work shall be executed in strict accordance with the latest edition of the following standards and codes and all local ordinances and regulations:
   1. NFPA National Fire Protection Association
   2. NEC National Electrical Code
   3. ANSI C2 National Electrical Safety Code
   4. NEMA National Electrical Manufacturers Association
   5. U.L. Underwriters Laboratories
   6. WAC Washington State Building Code
   7. IBC International Building Code
D. The Contractor is required to familiarize himself with the detailed requirements of these standards and any local codes and ordinances as they affect the installation of specific electric systems.

1.03 REFERENCE DOCUMENTS AND SPECIFICATIONS

A. Division 26 Contractor shall be in full compliance with applicable provisions of Division 1 and 20 including necessary coordination, permits, fees, submittals, etc. (All sections of Division 26 are a part of these requirements).
B. The Contractor shall refer to the drawings, project data and shop drawings of other trades for additional details, which affect the proper installation of the work.
C. Diagrams and symbols showing electrical connections are diagrammatic only, and do not necessarily show the exact physical arrangement of the equipment.

1.04 DEFINITIONS

A. Provide shall mean to furnish and install.
B. In general, electrical and electronic terms are used in these specifications, and on the drawings, shall be defined in Article 100 of the National Electric Code (NFPA 70). Terms not specifically defined in the article shall be defined in IEEE 100, IEEE Standard Dictionary of Electrical and Electronics Terms.

1.05 ELECTRICAL DRAWINGS

A. Electrical drawings are diagrammatic and not intended to show all features of work. Do not scale drawings for equipment location. Review all architectural, structural, mechanical and equipment drawings and adjust to conform to conditions shown. Dimensional accuracy is not guaranteed and field verification of dimensions, locations and levels to suit field conditions is required by this Division.
B. Circuits and connections indicate the general character and approximate location, The layout does not necessarily show the total number of conduits for the circuits required, not are the locations of indicated runs intended to show the actual routing of the conduits.

C. Any minor changes in the location of the conduits, outlets, etc. (to coordinate with final furniture and equipment drawings), from those shown on the plans shall be made without extra charge, if so directed, in writing by the Engineer before rough-in.
D. Contractor shall study the building drawings in relation to spaces and equipment surrounding each outlet and install electrical items in a manner to provide an aesthetic appearance. When necessary, with the Engineer's written approval, outlets shall be relocated to avoid interference with structural features of the building, and to accommodate mechanical equipment.
E. The horsepower of motors and apparatus wattages indicated on the plans are estimated requirements of equipment furnished under other divisions of this contract and bid is based on these sizes. Overload elements shall be furnished to suit installed equipment nameplate current. Advise Engineer of any subsequent equipment changes affecting electrical circuits.
F. The electrical "Symbol Legend" show on the drawings is standardized for this project. Use legend as reference for symbols used on plans.
G. The Electrical Contractor shall thoroughly examine the electrical drawings and specifications, as well as other disciplines (architectural, structural, mechanical, etc.) and shall familiarize him/herself with the scope of work prior to submitting a bid. The bidder is also advised that the drawings are symbolic and representative of design intent. All devices, fasteners, fixtures, and appurtenances may or may not be shown explicitly on the drawings or named in the specifications. Successful bidders will be responsible for providing a complete, code-compliant, working installation including all such items, whether or not explicitly shown on the drawings that are reasonably necessary or could reasonably be inferred from a thorough examination of the drawings, the specifications, and the site.
H. Discrepancies or contradictions within the contract documents shall be brought to the attention of the engineer prior to submitting a bid. The contractor is responsible to assume the most expensive option, and shall qualify that assumption in the bid, in writing. Final decision shall be evaluated and made by Engineer, after bid, as to the required option.

1.06 SITE FAMILIARIZATION

A. Before submitting a bid, the Electrical Contractor shall visit the site and familiarize himself with all features of the site, which may affect the execution of his work. The Contractor shall take all field measurements necessary for his work and shall assume full responsibility for their accuracy.

1.07 EXISTING CONDITIONS

A. Existing conditions shown on drawings have been prepared from record information. The Contractor shall visit the job site and verify the existing conditions to his satisfaction; allow adequate monies to cover additional work required as a result of the existing conditions. Include necessary work to provide temporary construction power from existing service.

1.08 PERMITS, FEES AND NOTICES

A. Pay all electrical permits and fees..
B. Notify Engineer of conflicts between the documents with regulations prior to bid or commencing work.

1.09 SEISMIC EQUIRMENTS

A. All electrical distribution and utilization equipment furnished under this contract shall be designed, constructed and installed in accordance with the earthquake regulations of the current building code. Design, construction and installation of the equipment shall meet or exceed the Code requirements for the Seismic Zone in which the equipment is installed..

1.10 INSPECTIONS

A. Notify Engineer (and code enforcing agencies as required) prior to covering of any concealed work; pulling of wires and cable, installation of lighting fixtures, or placing of covers on outlets, cabinets, and panelboards.

1.11 COORDINATION

A. The Division 26 Contractor is responsible to coordinate electrical.work with other trades to allow the code compliant installation of electrical equipment, raceways, lighting, etc., with respect to other equipment

including but not limited to ductwork, piping, HVAC equipment, and furniture. Coordination shall be performed with other trades, including General Contractor, by reviewing shop drawings, architectural/mechanical/civil/structural drawings, and furniture layouts. Relocation of electrical equipment to accommodate other trades shall not be considered grounds for additional funds beyond the base contract, but shall be considered part of Contractor's coordination responsibility.

B. Special attention is called for the following items:
   1. Door swings such that switches will be located on the "strike" of the door.
   2. Location of fixtures, pipes, ducts and other mechanical equipment such that electrical outlets, lighting fixtures and other electrical equipment are mounted on proper relationship to these items.
   3. Adequate space above ceiling to allow for recessed lighting fixtures.
   4. Recessed lighting fixture trim and installation required to accommodate ceiling type (i.e. Gyp or lay-in).
   5. Location of cabinets and counters such that electrical work is clear from and in proper relation to these items.
   6. Penetrations of building structure for electrical work.
   7. Compliance to Section 110-26 of N.E.C. – Spaces About Electrical Equipment.
   8. Coordination and provisions for maintaining lighting and power to areas in use during construction (comply with General Division Provisions).
   9. HVAC equipment controls.

C. When conduit, insert or sleeves for outlet boxes and/or conduits are required, Contractor shall fully coordinate the installation thereof with other trades.

D. The Electrical Contractor shall take full responsibility for furnishing, installing and trouble shooting all electrical systems in the building. The Electrical Contractor shall be responsible for overall coordination of all electrical systems and ensuring correct and full operation of all systems and system interfaces. The Electrical Contractor shall coordinate the interfaces between the electrical systems and all other systems.

1.12 WARRANTY

A. The Contractor shall be responsible for all work installed under this specification. He shall make good, repair or replace, at his own expense as may be necessary, any defective work, materials or parts which may show themselves defective within one year after final acceptance if said defect is due to imperfection in material, design or workmanship. Lamps are not warranted, but all shall be operating at time of final acceptance.

1.13 DOCUMENTS AT JOB SITE

A. Maintain on the site, in good condition, a complete file fo all reviewed design drawings and specifications, submittal data, shop drawings, etc. These documents shall be retained at the site until final acceptance of work and shall be made available at all times for use of the Engineer.

1.14 AS BUILT DRAWINGS

A. Corrections and changes made during the progress of the work shall be recorded continuously on a set of prints kept readily available at the project during construction. Accurately locate all underground and underslab conduit and stub-outs. At the completion of the work, this Contractor shall furnish the Engineer with (1) set of marked up record drawings with all as built revisions (clearly drafted) included. Final payment will not be approved until completed.

1.15 SUBSTITUTIONS

A. Whenever any material or equipment is specified by patent or proprietary name or by the name of the manufacturer, such specification shall establish the standard of quality in that particular field of manufacture. The Engineer shall be the sole and final judge as to quality and acceptability of substitutions, no exceptions.

B. The successful Electrical Contractor will be responsible to provide and install equal products to those specified. If proposed substitutions are not equal, it will be the responsibility of the Electrical Contractor to provide an approved equal product at no extra cost to the project.

C. Any request for substitution shall be made in writing.

D. When the substitute equipment or material necessitates revisions to the plans or involves other trades, the Contractor shall include drawings and details showing all such changes, coordinate and assume any

liability and costs from the affected trades., Also, if a change requires engineering or mechanical services or other equipment modifications, these services shall be billable to the Contractor. If Contractor installs any devices or associated equipment (which are subject to submittal review) prior to submittal approval, it will be his responsibility to make any changes required to comply (if necessary) with approved equipment..

E. Any request for substitution for special systems; i.e., fire alarm, intercom, etc., shall be accompanied with a separate sheet listing by section and paragraph number, compliance with these specifications. Where the substitute item differs in any manner from the specified item that difference shall be noted and the difference described. Failure to comply with this paragraph shall be justification for disapproval.

1.16 DEMONSTRATION OF ELECTRICAL SYSTEMS

A. During final inspection, conduct an operating test for approval by Owner and Engineer. Demonstrate installation in accordance with the Contract Documents. Should any portion of the installation fail to meet requirements of Contract Documents, repair or replace items failing to meet requirements until items can be demonstrated to comply and be approved by the Engineer.

B. If requested by Engineer, Contractor shall ensure that instruments and personnel are available for measuring light intensities, voltage and current values, and for demonstration of continuity, grounds, or open circuit conditions.

PART 2 PRODUCTS

2.01 PRODUCTS

A. All products shall be new, UL listed and free from any defects.

2.02 COMPONENTS

A. System components shall be of one manufacturer and responsibility as to warranties and guarantees.

PART 3 EXECUTION

3.01 DEMOLITION

A. At completion of work, when new building has permanent power, existing service to be removed unless directed othwerwise by Owner.

3.02 CUTTING AND PATCHING

A. Any opening or penetration required for installation of electrical equipment, conduit, etc. shall be by Contractor including core drilling and fire sealing through rated assemblies. Patch existing surfaces to original condition. Coordinate paint color with Owner.

B. Cutting and Patching is subject to final approval by Engineer and Owner..

3.03 IDENTIFICATION

A. General
   1. All equipment and devices shall be identified with a plastic label.

B Panel Schedules (Typewritten)
   1. Physical Characteristics
      a. Standard form
      b. Tape or holder
   2. Location
      a. Interior of all panel doors.
   3. Description
      a. Panelboard number source
      b. Circuit number

C. Wire Markers
   1. Physical Characteristics
      a. Self-adhesive or heat shrunk
      b. ¾” or 1-1/2” strips

2. Location
   a. All control wire terminations.

3.04 TEMPORARY/CONSTRUCTION POWER

A. Existing service to be used for temporary power during construction. Electrical Contractor is responsible for inspecting existing service and providing material and labor as necessary to modify service to provide temporary construction power. Provide minimum of (2) duplex receptacles, 20 amp, GFI for use during construction.

3.05 SEISMIC REQUIREMENTS

A. Install all electrical distribution equipment according to the mounting recommendations provided by the manufacturer for the applicable Seismic Zone. For free standing equipment, mounting recommendations shall be provided by the manufacturer based upon approved shake table tests used to verify the seismic design of that type of equipment.

3.06 CLEAN-UP

A. The premises must be kept free of accumulated materials, rubbish and debris at all times. Surplus material, tools and equipment must not be stored at the job site. At the completion of the job, all equipment and fixtures shall be left clean and in proper condition for their intended use.

3.07 PAINTING

A. Touch-up electrical equipment with factory finished surfaces as required by the Engineer using matching factory furnished paint. Coordinate field-painting requirements with the Engineer prior to final trim and cover installation. Do not paint screw heads, hinges, nameplates, hardware, etc.

3.08 POWER CONNECTIONS AND PHASE ROTATION

A. The Electrical Contractor shall make all power connections to all electrical motor starters or controller (provided in Division 20) and devices (such as kitchen equipment, HVAC, etc.) provided by Owner or other division where shown on drawings. Proper phase rotation shall be maintained at all times, The Contractor shall provide a phase rotation meter, check and identify proper rotation of equipment, prior to energizing equipment.

3.09 CONCRETE BASES

A. The Electrical Contractor shall provide concrete base at new CT Can/meter base as required per code.

3.10 OPERATING AND MAINTENANCE INSTRUCTIONS AND MANUALS

A. Prepare three copies of an Operating and Maintenance Manual for all equipment provided under Division 20 in accordance with the requirements of Division 1.
   1. Operation and Maintenance Manuals shall include operating information, maintenance information, control information, parts lists, filter information, where applicable, lubrication information and exploded view diagrams when applicable.
   2. Information shall be arranged in an orderly manor.
   3. The manuals shall include Testing and Balancing Reports.
   4. O and M Manuals shall be provided prior to requesting final payment.

3.11 FIRE BARRIERS

A. This Contractor shall review the architectural drawings to determine the location of all fire barriers (walls, floors, etc.). All openings for conduits, cables, ducts, etc. penetrating any fire barrier shall be sealed with an approved fire stop product. The product shall be approved for the size opening to be sealed.

B. Review the mechanical drawings for all fire/smoke dampers to be installed in the fire barriers. Provide electrical power connections to all fire/smoke dampers shown on the mechanical drawings. Fire/smoke dampers shall be connected to the fire alarm control panel to indicate the damper has been activated.

3.12 TESTING

A. General: The Contractor shall test all wiring and all electrical equipment installed in this contract to verify absence of grounds and short circuits and verify proper operation, rotation, and phase relationship. All equipment shall be demonstrated to operate in accordance with the requirements of this specification and the manufacturer's recommendations. All instruments and personnel required to conduct the tests shall be provided by the Contractor.
B. If the test results indicate corrective measures are required, the Contractor shall undertake all such corrective measures until the electrical system is accepted by the Engineer. No additional compensation will be paid for corrective measures.

END OF SECTION

31 11 00 CLEARING AND GRUBBING

PART 1 GENERAL

1.01 SECTION INCLUDES

A. Clearing.
B. Grubbing.
C. Disposal.
D. Field Quality Control.

1.02 RELATED SECTIONS

A. Section 312300 – Excavation and Fill.

1.03 REFERENCES

A. Washington State Department of Transportation (WSDOT) Standard Specifications for Road, Bridge, and Municipal Construction (current edition).

1.04 SUBMITTALS

A. Haul location of all material being transported off site.

PART 2 PRODUCTS

NONE

PART 3 EXECUTION

3.01 EXAMINATION

A. Inspect site to verify the extents of clearing and grubbing and notify the Engineer if there is any vegetation that is likely to be damaged during the course of clearing that is not indicated on the plans.

3.02 PREPARATION

A. Install erosion control measures as indicated on the Temporary Erosion and Sediment Control plan.

3.03 CLEARING

The Contractor shall:
A. Fell trees only within the area to be cleared.
B. Protect, by fencing if necessary, all trees or native growth from any damage caused by construction operations.

3.04 GRUBBING

The Contractor shall:
A. Grub deep enough to remove all stumps, large roots, buried logs, and other vegetative material.
B. Grub all areas within the “construction limits” as shown on the drawings.

3.05 DISPOSAL

A. Debris from clearing including brush, trees and other vegetation shall be hauled off-site to a dump site that is approved by the Engineer.

3.06 FIELD QUALITY CONTROL

A. The Contractor shall notify the Engineer once clearing and grubbing has been completed. The Engineer shall walk the site and approve the completion of the clearing and grubbing prior to the Contractor beginning to grade the site.

END OF SECTION

31 22 00 GRADING

PART 1 GENERAL

1.01 SECTION INCLUDES

A. Quality Assurance
B. Grading Tolerances
C. Disposal.
D. Field Quality Control.

1.02 RELATED SECTIONS

A. Section 311100 – Clearing and Grubbing.
B. Section 312300 – Excavation and Fill.

1.03 REFERENCES

A. Washington State Department of Transportation (WSDOT) Standard Specifications for Road, Bridge, and Municipal Construction (current edition).

1.04 SUBMITTALS

A. Soil Sterilant product data.
B. Soil Sterilant MSDS.

1.05 QUALITY ASSURANCE

A. Perform work in accordance with Division 2 of the WSDOT Standard Specifications.

PART 2 PRODUCTS

A. Soil Sterilant: Soil Sterilant shall be a commercial product containing sodium chlorate or borate which has been proven effective under local conditions and is acceptable under state and local codes.

PART 3 EXECUTION

3.01 EXAMINATION

A. Verify that all trees, vegetation and organic soils have been removed within the excavation area prior to beginning work.
B. Inspect erosion control measures to ensure proper installation prior to beginning work.

3.02 PREPARATION

A. Clear and Grub per Section 311100.

3.03 GRADING

A. The Contractor shall grade site and prepare subgrade for asphalt roadway, parking areas and sidewalk per Section 2-06.3 of the WSDOT Standard Specifications.

3.04 TOLERANCES

The Contractor shall bring grades within the following tolerances:

A. Finish Subgrade shall be within 0.10 foot of design grade in non-structural areas.
B. Finish Subgrade shall be within 0.05 foot of design grade in structural areas.
C. Make proper allowance for finish grades within planting areas. Subgrade within planting areas shall be within 0.20 foot of design grades. Final grade within planting areas shall be within 0.10 foot of design grade.

3.05 SOIL STERILANT

A. Soil sterilant shall be applied under all asphalt pavement and concrete.
B. Apply soil sterilant according to manufacturer's instructions.

3.06 QUALITY CONTROL

A. Once grading and preparation of subgrade is complete the Contractor shall contact the Engineer to witness a proof roll of entire parking lot subgrade. The proof roll shall be completed by a fully loaded dump truck.
B. Subgrade shall be firm and unyielding. If a “soft spot” is witnessed by the Engineer, the unsuitable material shall be over excavated and ballast shall be used to replace. See specification section 312300 for procedure of installing and compacting fill.

END OF SECTION

31 23 00 EXCAVATION AND FILL

PART 1 GENERAL

1.01 SECTION INCLUDES

A. Excavation and Backfill for Structures.
B. Excavation and Backfill for Trenches.
C. Structure Compaction.
D. Trench Compaction.
E. Disposal of Excavated Material.

1.02 RELATED SECTIONS

A. Section 31 11 00 – Clearing and Grubbing
B. Section 31 22 00 – Grading
C. Section 32 11 00 – Base Courses

1.03 REFERENCES

A. Washington State Department of Transportation (WSDOT) Standard Specifications for Road, Bridge, and Municipal Construction (current edition).

1.04 SUBMITTALS

A. Haul location of all material being transported off site.
B. See section 321100 for material submittals.

1.05 QUALITY ASSURANCE

A. Perform work of this section in accordance with Division 2 of the WSDOT Standard Specifications.

PART 2 PRODUCTS

2.01 FILL MATERIAL

A. All material used as fill in structural area shall meet the structural fill specification in Section 321100 of these specifications.

PART 3 EXECUTION

3.01 EXAMINATION

A. Verify that all trees, vegetation and organic soils have been removed within the excavation area prior to beginning work.
B. Inspect erosion control measures to ensure proper installation prior to beginning work.

3.02 PREPARATION

A. Clear and Grub per Section 311100.

3.03 EXCAVATION AND BACKFILL FOR STRUCUTRES

Excavation and backfill for structures shall be in conformance with Section 2-09.3 of the WSDOT Standard Specifications (excavation shall be considered Class B), and as further described herein:

A. Fill material placed under structures, including future footings and floor slabs, shall be approved on-site excavated material or imported structural fill as specified in Section 321100.

1. Structure excavation shall be performed as required for the construction of future homes shown on the Drawings. In the event unsuitable material is encountered at subgrade elevation, over excavation will be required with structural fill used to obtain needed elevation.
2. The Contractor shall notify the Engineer when excavation or compacted fill for structures is complete.

B. Compaction

1. The foundation material underneath all structures shall be moisture conditioned to within 3 percent of optimum moisture content and shall be placed in loose, horizontal layers. The thickness of layers shall not exceed 8” for compaction by heavy equipment and 4” for compaction by hand-operated mechanical compactors.
2. Layers shall be compacted to a dense state equaling at least 95% of the maximum dry density, using the modified proctor, per ASTM D1557. Prior to the placement of fill below structures, any and all groundwater and surface water shall be drained or pumped from areas to be filled.
3. Wall backfill material shall be compacted to at least 90% of the maximum dry density, using the modified Proctor per ASTM D1557, within 5 feet of all walls. Any and all compaction within 5 feet of walls shall be accomplished by means of hand-operated mechanical equipment rather the heavy equipment compactors

3.04 ROADWAY EXCAVATION AND EMBANKMENT

Excavation and embankments as required for roadway and rain garden construction shall be in conformance with Section 2-03 of the WSDOT Standard Specifications:

A. Selected material

1. Where contract calls for raising of grade, selected on-site material shall be used. On-site material shall be viewed and approved by the Engineer prior to use.

B. Earth Embankment Construction

1. Earth embankments as required for roadway construction shall be per Section 2-03.3(14)B of the WSDOT Standard Specifications. Embankment compaction shall be by Method B.

3.05 EXCAVATION AND BACKFILL FOR TRENCHES

A. Excavation and backfill for structures shall be in conformance with Sections 7-08.3(1)A of the WSDOT Standard Specifications and as further described herein:

1. The Contractor has a maximum limit of 100 LF of open trench, and the Owner reserves the right to restrict the allowable limit of open trench as it sees fit to promote safety. Upon completion of work each day, all pipe line and open trenches shall be completely backfilled and leveled.
2. Above the foundation material, if any, the gravel backfill for pipe bedding shall be placed in a lift of approximately 4”, and compacted to 90%, creating a uniform ground in which to lay the pipe. Once the pipe has been laid, gravel backfill shall be placed by hand shovel, and compacted to 90%, to a point 6” above the top of the pipe. Complete backfilling of trenches shall not be permitted until the section of pipe in question has been inspected by the Engineer.
3. From the point 6” above the top of the pipe, backfill with native material in 6” lifts and compacted to 95%. There must be a minimum of 30” of material on top of the pipe. Until there is at least 36” of material on top of pipe the Contractor shall not bulldoze backfill material into the trench or drop it directly over the pipe. All backfill shall be free of large rocks, stumps, trees, pieces of pavement, broken concrete and other material that could damage the pipe.
4. The Contractor shall repair any defects that appear in the backfill prior to final acceptance of the work. Cleanup operations shall progress immediately behind backfilling to accommodate the return to normal use of the trench area.

B. Trench Compaction

1. Pipe bedding material shall be compacted to at lest 90% of the maximum dry density, using the modified Proctor, per ASTM D1557.
2. Compaction of backfill above bedding material shall be compacted to 90% in all non traffic areas, and 95% in traffic areas using the modified Proctor per ASTM D1557.

END OF SECTION

32 11 00 BASE COURSES

PART 1 GENERAL

1.01 SECTION INCLUDES

A. Base Rock.
B. Top Rock.
C. Structural Fill.
D. Gravel Backfill for Pipe Zone Bedding.

1.02 RELATED SECTIONS

A. Section 321216 – Asphalt Paving
B. Section 312300 – Excavation and Fill

1.03 REFERENCES

A. Washington State Department of Transportation (WSDOT) Standard Specifications for Road, Bridge, and Municipal Construction (current edition).

1.04 SUBMITTALS

A. Soil tests and certification that ballast rock, crushed surfacing top course, pipe zone bedding and structural fill meets the material and gradation requirement of the Standard Specifications. Include laboratory test reports verifying compliance.
C. Sand equivalency test results for ballast, crushed surfacing top course, and pipe zone bedding.
B. Modified Proctor results for ballast, crushed surfacing top course, gravel backfill for pipe zone bedding, native subgrade material and structural fill.

PART 2 PRODUCTS

2.01 BASE ROCK

A. The base rock layer shall be ballast rock that substantially conforms to Section 9-03.9(1) of the WSDOT Standard Specifications.
B. Ballast rock must be within 5% of the specified percent passing at each sieve size except the material must have less than 9% passing the No. 200. Sand equivalency is permitted to be a minimum of 30%.

2.02 TOP ROCK

F. Top rock layer shall be crushed surfacing top course that substantially conforms to Section 9-03.9(3) of the WSDOT Standard Specifications, top course gradation.
G. CSTC must be within 5% of the specified percent passing at each sieve size except the material must have less than 10% passing the No. 200. Sand equivalency is permitted to be a minimum of 30%.

2.03 STRUCTURAL FILL

A. Import material used to replace unsuitable material or to raise existing grade in roadway areas shall be aggregate for Gravel Base per Section 9-03.10 of the WSDOT Standard Specifications.

2.04 GRAVEL BACKFILL FOR PIPE ZONE BEDDING

A. Material used to bed around pipe as detailed in the drawings shall be Gravel backfill for pipe zone bedding that conforms to Section 9-03.12(3) of the WSDOT Standard Specifications.

PART 3 EXECUTION

3.01 EXAMINATION

A. Carefully investigate site conditions and confirm that grading is adequate to achieve needed elevations by

placing of granular material. Contractor must maintain minimum thicknesses of granular material as called out on plans and shown in the details.

3.02 BASE ROCK / TOP ROCK

A. Place ballast and crushed surfacing top course as detailed in Section 4-04 of the WSDOT Standard Specifications.

3.03 PIPE ZONE BEDDING

A. See specific water, storm, and sewer specifications.

3.04 TOLERANCES

A. Finish compacted elevations of base rock and top rock shall be within 0.05' of design grade.

3.05 QUALITY CONTROL

A. Once base rock has been placed and compacted the Contractor shall contact the Engineer to witness a proof roll. The proof roll shall be completed by a fully loaded dump truck.
B. If a "soft spot" is witnessed by the Engineer, the contractor shall repair it to the satisfaction of the Engineer at no additional cost to the Owner.

END OF SECTION

32 12 16 ASPHALT PAVING

PART 1 GENERAL

1.01 SECTION INCLUDES

A. Hot Mix Asphalt.

1.02 RELATED SECTIONS

A. Section 321100 – Base Courses

1.03 REFERENCES

A. Washington State Department of Transportation (WSDOT) Standard Specifications for Road, Bridge, and Municipal Construction (current edition).

1.04 SUBMITTALS

A. Product data and certification that asphalt concrete pavement materials comply with the specification requirements. Include design mix formula and include laboratory test reports verifying compliance with the design mix formula.
B. Product data and certification that tack materials comply with specification requirements.

1.05 QUALITY ASSURANCE

A. Contractor shall have a minimum of five years of experience specializing in constructing asphalt roadways and must be willing to provide past performance references if requested by the Engineer.

PART 2 PRODUCTS

2.01 HOT MIX ASPHALT

A. Hot mix asphalt concrete pavement shall be HMA Cl. ½" PG 64-22 and shall conform to Section 5-04.3 of the WSDOT Standard Specifications.

2.02 TACK

A. Tack coat shall be required when new Asphalt Concrete Pavement is placed on, or abutting, existing asphalt. It shall be AR-4000W, as specified in Section 9-02.1(4) of the WSDOT Standard Specifications.

PART 3 EXECUTION

3.01 EXAMINATION

A. Carefully investigate site condition and confirm that grading and placing of aggregate is to the correct elevation. Contractor must maintain minimum thicknesses of pavement as called out on plans and shown in the details.

3.02 PREPARATION

A. The surface of the top rock will have to be approved by the Engineer prior laying asphalt.

3.03 HOT-MIX ASPHALT

A. Asphalt concrete pavement materials shall be placed on compacted subgrade materials, as shown on the Drawings, and in conformance with Sections 4-04, 4-06, and 5-04 of the WSDOT Standard Specifications. The Contractor shall place asphalt concrete over prepared base course in a single lift. Methods of proportioning, mixing, transporting, laying, processing, rolling, and compacting the material, and the standards of workmanship shall conform to the applicable requirements of Division 5 of the WSDOT Standard Specifications.
B. HMA shall be compacted to 91% of the referenced maximum density as determined by WSDOT FOP for AASHTO T 209.

3.04 TACK

A. All joints of asphalt concrete pavement shall be sealed with asphalt cement. The asphalt paint binder, or tack coat, shall conform in all respects to Section 5-04 of the WSDOT Standard Specifications. After pavement is in place, all joints shall be sealed with hot asphalt cement (AR 4000W).

END OF SECTION

33 10 00 WATER UTILITIES

PART 1 GENERAL

1.01 SECTION INCLUDES

A. Water distribution piping.
B. Water distribution equipment.
C. Gravel backfill for pipe zone bedding.

1.02 RELATED SECTIONS

A. Section 312300 – Excavation and Fill.

1.03 REFERENCES

A. Washington State Department of Transportation (WSDOT) Standard Specifications for Road, Bridge, and Municipal Construction (current edition).

1.04 SUBMITTALS

A. Product Data: Submit manufacturers' data on manufactured products showing compliance with specified requirements.
B. Project Record Documents: Accurately record actual locations of underground utilities in reference to permanent site fixtures.

1.05 QUALITY ASSURANCE

A. Follow all manufacturer recommendations for handling and installing pipe and equipment.
B. All pipes and valves of the same style or type shall be furnished by a single manufacturer.

PART 2 PRODUCTS

2.01 PIPING

A. Service Pipe: Service pipe is 1”ø polyethylene tubing meeting the requirement of AWWA C901. Tubing shall be SDR 9 rated for 200 psi pressure.

2.02 EQUIPMENT

A. Water Service Connections: Service connections shall conform to City of Port Angeles standard specifications.
B. Water Utility Metering: Water meter will be installed in existing meter box by the City of Port Angeles..

2.03 GRAVEL BACKFILL FOR PIPE ZONE BEDDING

A. Gravel Backfill for Pipe Zone Bedding: Gravel backfill for pipe bedding shall consist of crushed, processed or naturally occurring granular material, and shall meet gradation standards from Section 9-03.12(3) of the WSDOT Standard Specifications. The material shall be free of clay and organic material. It shall have such characteristics of size and shape that it will compact readily.

PART 3 EXECUTION

3.01 EXAMINATION

A. Carefully investigate site condition and confirm that trenches are located as shown on the drawings, are of specified size and have the minimum requirements of bedding.

3.02 PIPE INSTALLATION

A. Water line installation shall conform to Sections 7-09.3(7-16) of the Washington State Department of Transportation Standard Specifications.
B. Concrete thrust blocks shall be installed at all bends, tees, dead ends, and crosses, and shall conform to

Section 7-09.3(21) of the Washington State Department of Transportation Standard Specifications.

3.03 EQUIPMENT INSTALLATION

A. All valves and accessories shall be installed in a manner and location as shown on the Drawings and in accordance with manufacturer's instructions. Valve size is fully equal to line piping in which the valve is installed unless otherwise noted on the Drawings. Support all valves where necessary. In case of conflict between these Specifications and P.U.D specifications, the PUD specs shall prevail.
B. Provide all accessories necessary for proper valve operation as specified or required for the application. Buried valves shall be installed under valve boxes with covers as detailed on the Drawings.
C. Valves shall be installed with the operator in a position for convenient operation. Particular care shall be taken to insure that space is available for operation of lever or hand wheel operated valves without interference with walls, piping or equipment. Any valve which is installed, in the opinion of the Engineer, in a manner that operation is inconvenient shall be modified or removed and reinstalled in a manner suitable to the Engineer at the expense of the Contractor.

3.04 FIELD QUALITY CONTROL

A. Coordinate with City of Port Angeles for any water line testing and certification.

END OF SECTION

33 40 00 STORM DRAINAGE

PART 1 GENERAL

1.01 SECTION INCLUDES

A. Storm drain piping.
B. Storm drain structures.

1.02 RELATED SECTIONS

A. Section 312300 – Excavation and Fill.

1.03 REFERENCES

A. Washington State Department of Transportation (WSDOT) Standard Specifications for Road, Bridge, and Municipal Construction (current edition).

1.04 SUBMITTALS

A. Product Data: Submit manufacturers' data on manufactured products showing compliance with specified requirements.
B. Sieve analysis for drain rock material to show compliance with specification.
C. Project Record Documents: Accurately record actual locations of underground utilities in reference to permanent site fixtures.

1.05 QUALITY ASSURANCE

A. Follow all manufacturer recommendations for handling and installing pipe and equipment.
B. All pipes and structures of the same style or type shall be furnished by a single manufacturer.

PART 2 PRODUCTS

2.01 PIPING

A. Storm drain pipe and fittings, 6” and smaller, shall be PVC that comply with ASTM D3034, SDR 35. Pipe and fittings shall be furnished with bells and spigots, which are integral with the pipe wall and with a rubber gasket securely locked in place in the bell. Joints for PVC pipe shall conform to ASTM D 3212 using elastomeric gaskets conforming to ASTM F 477. Fittings for solid wall PVC pipe shall be injection molded, factory welded, or factory solvent cemented.
B. Storm drain pipe and fittings, 8” and larger, shall be HDPE. HDPE pipe must meet the requirements of AASHTO M 294 Type S or D. HDPE Pipe shall be furnished with bells and spigots ends conforming to ASTM D 3212 using elastomeric gaskets conforming to ASTM F477.

2.02 STRUCTURES

A. Raingarden Overflow Drain: Raingarden overflow drain shall be a 12”ø PVC or HDPE custom drainage structure with light duty dome grate similar to Nyloplast.
B. Gaskets and Catch Basin Adapters: Pipe connections to catch basins shall be made using a heavy duty sand collar with gasket, head, or equal.

2.03 GRAVEL BACKFILL FOR PIPE ZONE BEDDING

A. Gravel Backfill for Pipe Zone Bedding: Gravel backfill for pipe bedding shall consist of crushed, processed or naturally occurring granular material, and shall meet gradation standards from Section 9-03.12(3) of the WSDOT Standard Specifications. The material shall be free of clay and organic material. It shall have such characteristics of size and shape that it will compact readily.

PART 3 EXECUTION

3.01 EXAMINATION

A. Carefully investigate site condition and confirm that trenches are located as shown on the drawings and are of specified depth to achieve invert elevations called out on the plan.
B. Coordinate with the Engineer if there are discrepancies between approved contract documents and existing utility locations and elevations in the field.

3.02 PIPE INSTALLATION

Storm drainage piping installation shall conform to Section 7-08.3(2)B of the Washington State Department of Transportation Standard Specifications and as follows:

A. Each piece of pipe and each fitting shall be carefully inspected prior to placement and no defective pipe shall be laid in trench. Pipe laying shall begin at the discharge end and proceed toward origin of gravity line with bell ends pointing upstream.
B. All bell and spigot connections shall be made up in strict compliance with the manufacturer's recommendations and all sewer pipe manufacture and handling shall meet or exceed the ASTM and CPAW recommended specifications, current revisions.
C. Pipe handling after the gasket has been affixed shall be carefully controlled to avoid disturbing the gasket and knocking it out of position, or loading it with dirt or other foreign material. Any gaskets so disturbed shall be removed, cleaned, re-lubricated if required, and replaced before the rejoining is attempted.
D. Care should be taken to properly align the pipe before joints are entirely forced home. During insertion of the tongue or spigot, the pipe shall be partially supported by hand, sling or crane to minimize unequal lateral pressure on the gasket and to maintain concentricity until the gasket is properly positioned. Since most flexible gasketed joints tend to creep apart when the end pipe is deflected and straightened, such movement shall be held to a minimum once the joint is home.
E. Sufficient pressure shall be applied in making the joint to assure that it is home, as described in the installation instructions provided by the pipe manufacturer. Sufficient restraint shall be applied to the line to assure that joints once home are held so, until fill material under and alongside the pipe has been sufficiently compacted.
F. Dissimilar pipe shall be joined by use of a Caldor-type flexible coupling.
G. Solvent cement joining is accomplished by first priming both the fitting socket and the end of the pipe. Then apply a minimum of two layers of solvent cement. While solvent cement is still wet assembly pipe and fitting. Use sufficient force to ensure that the pipe bottoms in the fitting socket, and turn approximately a quarter turn if possible. Hold pipe and fitting together for about 30 seconds. Handle newly assembled joints carefully until initial set has taken place.

3.03 STRUCTURE INSTALLATION

A. Rain garden overflow drain installation shall conform to Section 7-05.3 of the Washington State Department of Transportation Standard Specifications.

3.05 RAIN GARDEN

A. Excavate rain garden to the depth and limits as shown on the drawings. Scarify bottom of rain garden to a depth of 3 inches.
B. Leave bottom of rain garden un-compacted. Heavy equipment shall not operate within rain garden limits.
C. Place a 15" thick layer of approved rain garden soil material to limits shown.
D. Place a 2"-3" thick layer of woody mulch over rain garden bottom/
E. Install plantings in conformance with the requirements of the 2012 Olw Impact Development Manual.

3.06 QUALITY CONTROL

A. Coordinate with the Engineer if there are discrepancies with the approved contract documents and existing utility locations and elevations in the field.

END OF SECTION

TAB 4 - REDUCED SIZE BUILDING PLANS

TAB 5 - SITE CONSTRUCTION PLANS

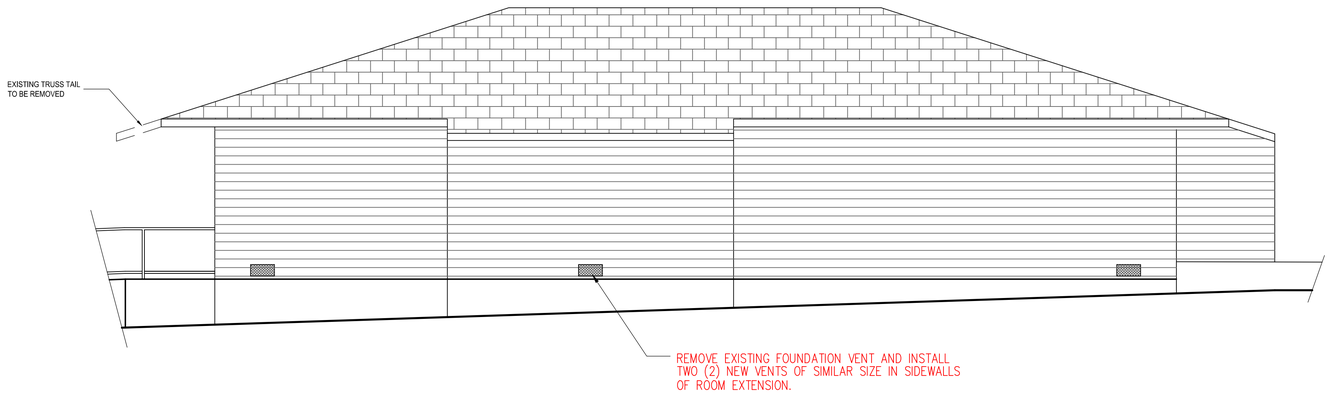

WEST ELEVATION
Scale: 1/4" = 1'

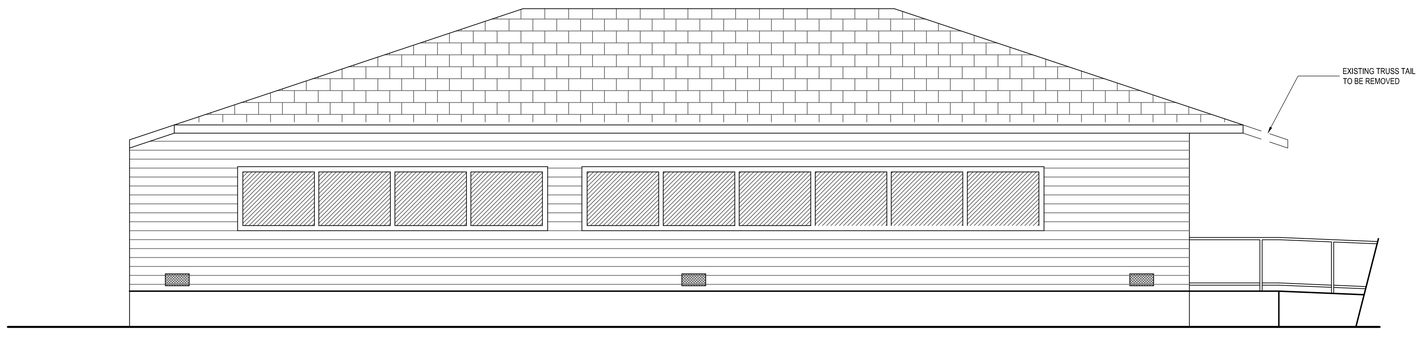

EAST ELEVATION
Scale: 1/4" = 1'

REVISIONS:

DATE	MARK	NOTE

ZENOVIC & ASSOCIATES
INCORPORATED
301 E. 6TH STREET, SUITE 1
PORT ANGELES, WA 98362
PHONE: (360) 417-0501
FAX: (360) 417-0514
EMAIL: ZENOVIC@ZENOVIC.NET

TITLE: HORIZON CENTER RELOCATION PROJECT-LOT 15 BLOCK 230 TPA, PORT ANGELES, WA

ELEVATIONS

CLIENT: WILLIAM SHORE MEMORIAL POOL DISTRICT
225 EAST 5TH STREET
PORT ANGELES, WA 98362

SCALE: 1/4" = 1'

DATE: February 19, 2019

FILE: A2-Floor Plan 7-10-18

JOB NO: 17198

STEPHEN M. ZENOVIC
STATE OF WASHINGTON
23594
REGISTERED
PROFESSIONAL ENGINEER

SHEET
A1
OF 5

SOUTH ELEVATION

Scale: 1/4" = 1'

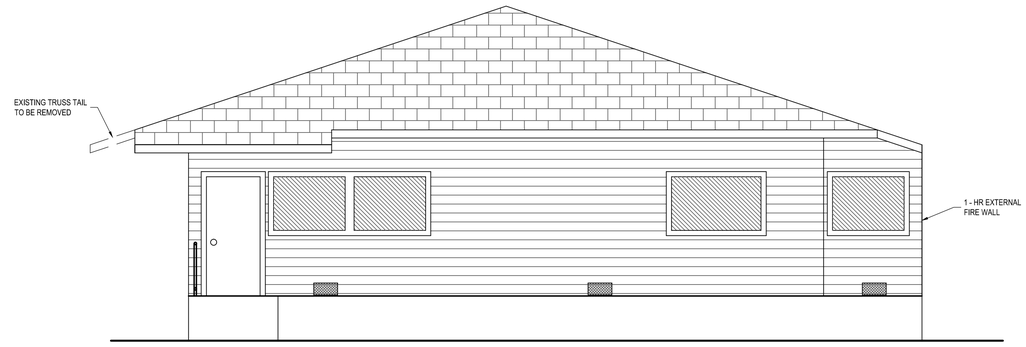

NORTH ELEVATION

Scale: 1/4" = 1'

REVISIONS:

DATE	MARK	NOTE

ENOVIC & ASSOCIATES
INCORPORATED
301 E. 6TH STREET, SUITE 1
PORT ANGELES, WA 98362
PHONE: (360) 417-0501
FAX: (360) 417-0514
EMAIL: ZENOVIC@ZENOVIC.NET

TITLE: ELEVATIONS

HORIZON CENTER RELOCATION PROJECT - LOT 15 BLOCK 230 TPA, PORT ANGELES, WA

CLIENT: WILLIAM SHORE MEMORIAL POOL DISTRICT
225 EAST 5TH STREET
PORT ANGELES, WA 98362

SCALE: 1/4" = 1'

DATE: February 19, 2019

FILE: A2-Floor Plan 7-10-18

JOB NO: 17198

STEPHEN M. ZENOVIC
STATE OF WASHINGTON
23594
REGISTERED
PROFESSIONAL ENGINEER

SHEET A2

OF 5

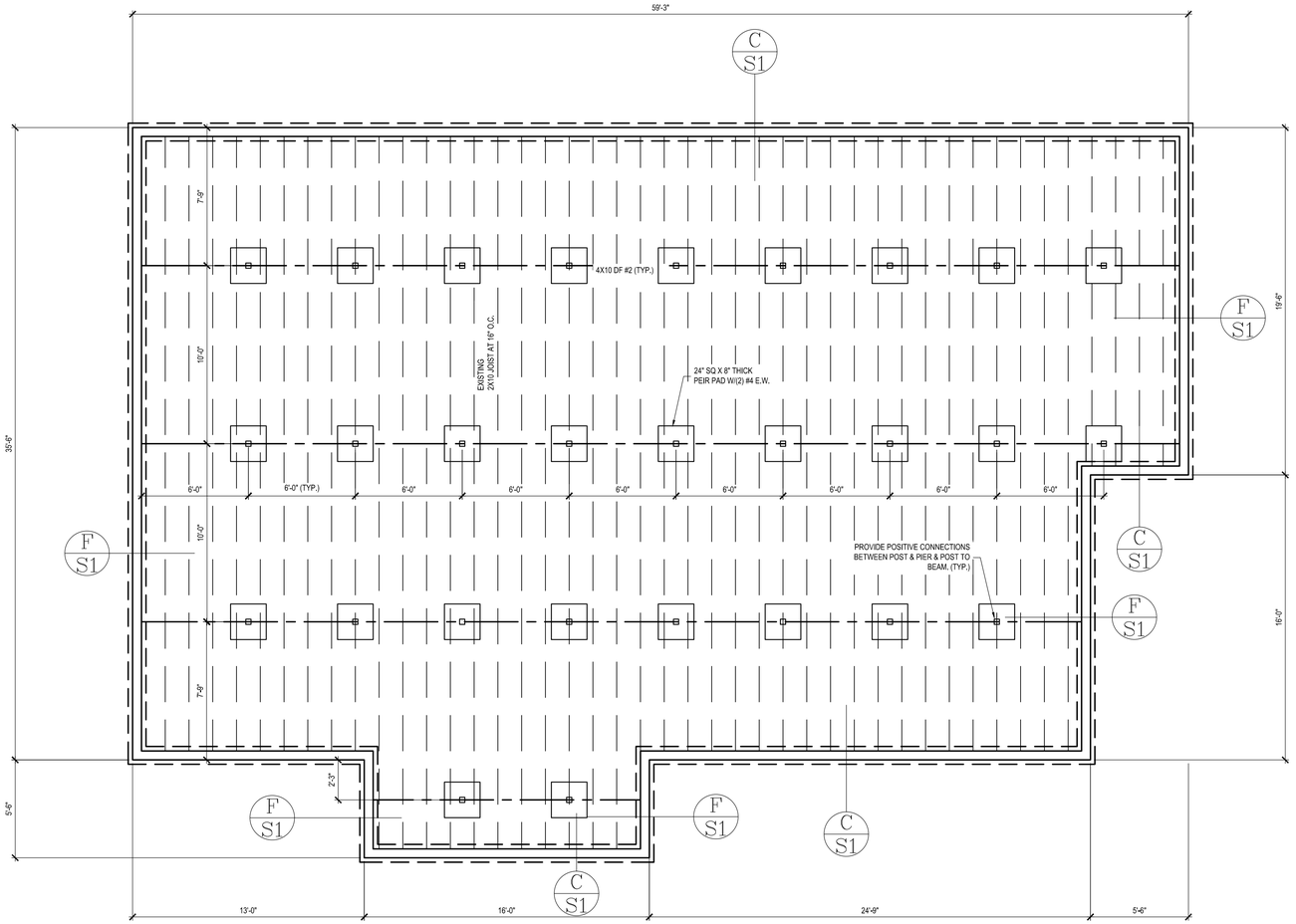

NOTE:
CONTRACTOR TO FIELD
VERIFY ALL DIMENSIONS

FOUNDATION PLAN

Scale: 1/4" = 1'

REVISIONS:

DATE	MARK	NOTE

ENOVIC & ASSOCIATES
INCORPORATED
301 E. 6TH STREET, SUITE 1
PORT ANGELES, WA 98362
PHONE: (360) 417-0501
FAX: (360) 417-0514
EMAIL: ZENOVIC@ZENOVIC.NET

TITLE: FOUNDATION PLAN
HORIZON CENTER RELOCATION PROJECT - LOT 1 BLOCK 220 TPA, PORT ANGELES, WA

CLIENT:
WILLIAM SHORE MEMORIAL POOL DISTRICT
225 EAST 5TH STREET
PORT ANGELES, WA 98362

SCALE: 1/4" = 1'

DATE: February 21, 2019

FILE: A2-Floor Plan 7-10-18

JOB NO: 17198

STEPHEN M. ZENOVIC
STATE OF WASHINGTON
23594
REGISTERED
PROFESSIONAL ENGINEER

SHEET
A3
OF 5

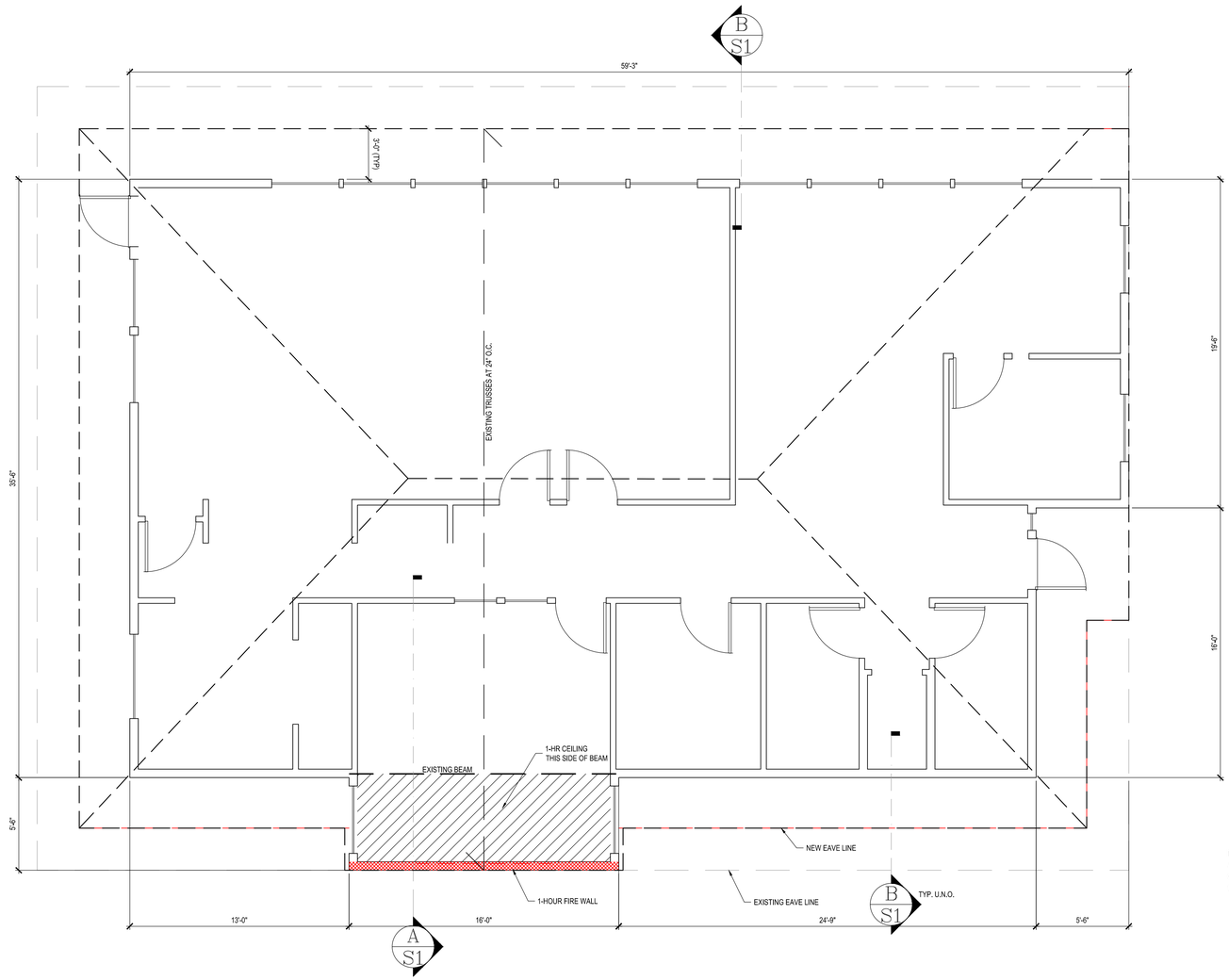

NOTE: EXISTING ROOF TO BE RE-ROOFED AS PART OF EAVE MODIFICATION W/ 30 YEAR COMP. ROOFING. COLOR TO BE COORDINATED W/ OWNER

ROOF/FLOOR PLAN

Scale: 1/4" = 1'

REVISIONS:

DATE	MARK	NOTE

ENOVIC & ASSOCIATES INCORPORATED
301 E. 6TH STREET, SUITE 1
PORT ANGELES, WA 98362
PHONE: (360) 417-0501
FAX: (360) 417-0514
EMAIL: ZENOVIC@ZENOVIC.NET

TITLE: HORIZON CENTER RELOCATION PROJECT - LOT 15 BLOCK 230 TPA, PORT ANGELES, WA

MAIN FLOOR PLAN

CLIENT: WILLIAM SHORE MEMORIAL POOL DISTRICT
225 EAST 5TH STREET
PORT ANGELES, WA 98362

SCALE: 1/4" = 1'

DATE: February 21, 2019

FILE: A2-Floor Plan 7-10-18

JOB NO: 17198

STEPHEN M. ZENOVIC
STATE OF WASHINGTON
23594
REGISTERED
PROFESSIONAL ENGINEER

SHEET A4

OF 5

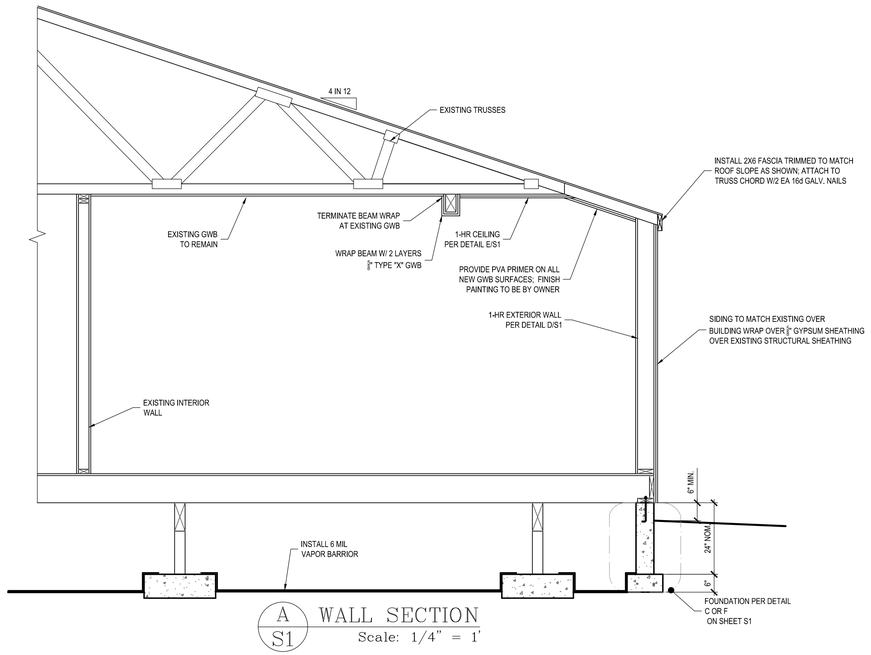

A S1 WALL SECTION
Scale: 1/4" = 1'

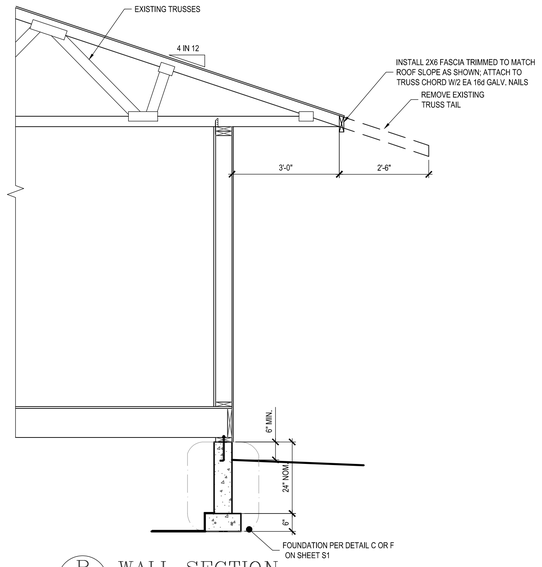

B S1 WALL SECTION
Scale: 1/4" = 1'

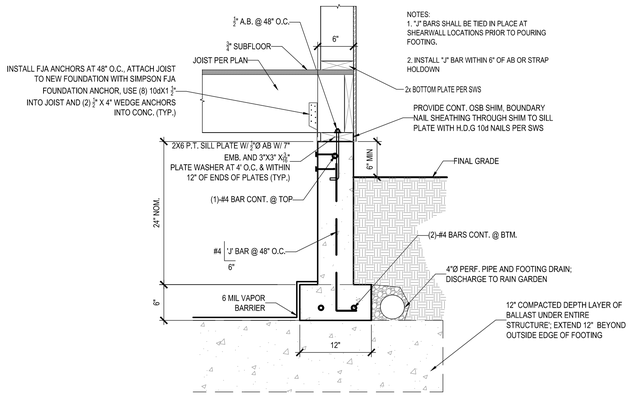

NOTES:
1. "J" BARS SHALL BE TIED IN PLACE AT SHEARWALL LOCATIONS PRIOR TO POURING FOOTING.

2. INSTALL "J" BAR WITHIN 6" OF AB OR STRAP HOLDOWN

C S1 FOOTING DETAIL
Scale: NTS

GA FILE NO. WP 8105

Gypsum Wallboard, Gypsum Sheathing, Wood Studs

Exterior side: One layer 48" wide 5/8" type X gypsum sheathing applied parallel to 2x6 wood studs MAX 24" o.c. with 1 ¾" galvanized roofing nails 4" o.c. at vertical joints and 7" o.c. at intermediate studs and top and bottom plates. Joints of gypsum sheathing may be left untreated. Exterior cladding to be attached through sheathing to studs. INCREASE FASTENER LENGTH ON GYPSUM SHEATHING BY THICKNESS OF STRUCTURAL SHEATHING WHEN INSTALLED OVER STRUCTURAL SHEATHING.

Interior Side: One layer 5/8" type X gypsum wallboard, water-resistant gypsum backing board, or gypsum veneer base applied parallel or at right angles to studs with 6d coated nails 1 7/8" long, 0.0915" shank, ¼" heads 7" o.c. (LOAD-BEARING)

D S1 EXTERIOR FIRE RATED WALL
Scale: N.T.S.

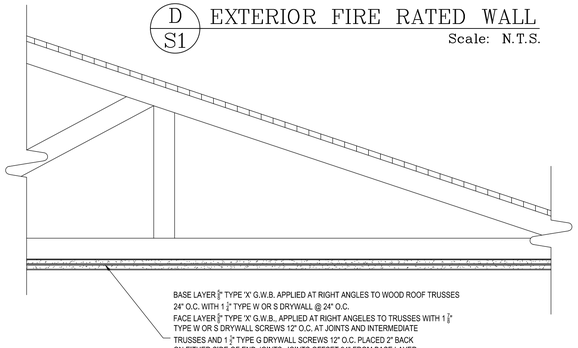

E S1 1-HR RATED CEILING ASSEMBLY
Scale: N.T.S.

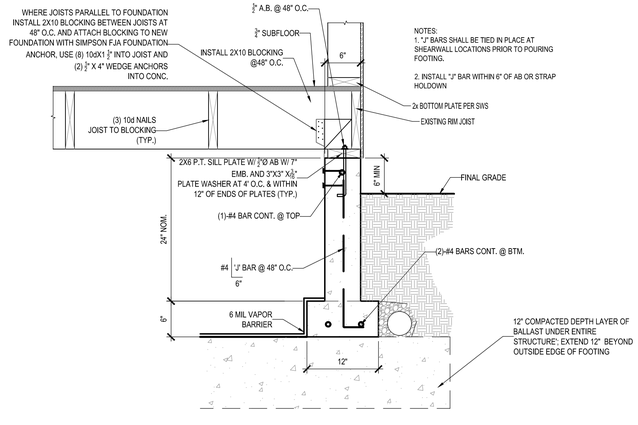

NOTES:
1. "J" BARS SHALL BE TIED IN PLACE AT SHEARWALL LOCATIONS PRIOR TO POURING FOOTING.

2. INSTALL "J" BAR WITHIN 6" OF AB OR STRAP HOLDOWN

F S1 FOOTING DETAIL
Scale: NTS

REVISIONS:

DATE	MARK	NOTE

ENOVIC & ASSOCIATES INCORPORATED
301 E. 6TH STREET, SUITE 1
PORT ANGELES, WA 98362
PHONE: (360) 417-0501
FAX: (360) 417-0514
EMAIL: ZENOVIC@ZENOVIC.NET

DETAILS

TITLE: HORIZON CENTER RELOCATION PROJECT - LOT 15 BLOCK 230 7TH, PORT ANGELES WA

CLIENT: WILLIAM SHORE MEMORIAL POOL DISTRICT
225 EAST 5TH STREET
PORT ANGELES, WA 98362

SCALE: N.T.S.

DATE: February 21, 2019

FILE: A2-Floor Plan 7-10-18

JOB NO: 17198

STEPHEN M. ZENOVIC STATE OF WASHINGTON 23594 REGISTERED PROFESSIONAL ENGINEER

SHEET S1

OF 5

CITY MAP

NO SCALE

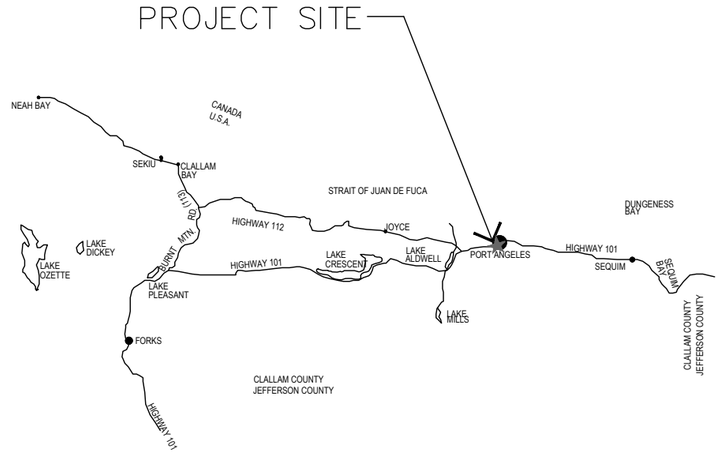

COUNTY MAP

NO SCALE

PROJECT INFORMATION

APPLICANT:	WILLIAM SHORE MEMORIAL POOL DISTRICT 225 EAST 5TH STREET PORT ANGELES, WA 98362
OWNER:	WILLIAM SHORE POOL MEMORIAL DISTRICT 225 EAST 5TH STREET PORT ANGELES, WA 98362
PROPOSED PROJECT:	HORIZON CENTER RELOCATION PROJECT
ZONING:	CSD - COMMERCIAL SHOPPING DISTRICT
UTILITIES:	STORM & SANITARY SEWER, WATER, & POWER - CITY OF PORT ANGELES TELEPHONE - N/A CABLE TELEVISION - N/A
PARCEL NO.:	06-30-00-02-3080
DATE OF PREPARATION:	FEBRUARY 2019
PROPERTY DESCRIPTION:	LOT 15, BLOCK 230 TOWNSITE OF PORT ANGELES

HORIZONTAL AND VERTICAL

CITY OF PORT ANGELES

HORIZ. NAD 83/91

VERT. NAVD 88

BENCHMARK:

MONUMENT AT NORTH PROPERTY CORNER

ELEVATION = 110.59

CALL BEFORE YOU DIG
811
FOR UNDERGROUND UTILITY LOCATION SERVICE

DRAWING INDEX

1 COVER SHEET WITH GENERAL NOTES
2 TEMPORARY EROSION AND SEDIMENTATION CONTOL PLAN
3 TESC DETAILS
4 PAVING AND GRADING PLAN
5 PAVING & GRADING DETAILS - 1
6 PAVING & GRADING DETAILS - 2
7 UTILITY PLAN
8 UTILITY DETAILS
9 HORIZON CENTER DEMOLITION AND TEMPORARY EROSION AND SEDIMENT CONTROL PLAN

APPROVED FOR CONSTRUCTION _____ DATE: _____ APPROVAL EXPIRES: _____

CITY ENGINEER

GENERAL NOTES:

1. ALL WORKMANSHIP AND MATERIALS SHALL BE IN ACCORDANCE WITH THE CITY OF PORT ANGELES STANDARDS, THE CURRENT EDITION OF THE WASHINGTON STATE DEPARTMENT OF TRANSPORTATION (WSDOT) STANDARD SPECIFICATIONS FOR ROAD, BRIDGE AND MUNICIPAL CONSTRUCTION (STANDARD SPECIFICATIONS), AND ANY PROJECT SPECIFIC SPECIAL PROVISIONS OR CONDITIONS AND REQUIREMENTS.

2. TEMPORARY EROSION/WATER POLLUTION MEASURES ARE REQUIRED AND SHALL COMPLY WITH CHAPTER 6 OF THE CITY OF PORT ANGELES' URBAN SERVICES STANDARDS AND GUIDELINES AND THE CURRENT EDITION OF THE WASHINGTON STATE DEPARTMENT OF TRANSPORTATION STANDARD SPECIFICATIONS FOR ROAD, BRIDGE AND MUNICIPAL CONSTRUCTION.

3. EXISTING AND NEWLY CONSTRUCTED STORM WATER DRAINAGE SYSTEMS SHALL BE PROTECTED FROM CONSTRUCTION SITE RUNOFF.

4. A PRECONSTRUCTION MEETING SHALL BE HELD WITH THE CITY PRIOR TO THE START OF CONSTRUCTION.

5. HORIZONTAL AND VERTICAL CONTROLS/DATUM AS ADOPTED BY THE CITY SHALL BE USED, UNLESS APPROVED OTHERWISE.

6. ALL APPROVALS AND PERMITS REQUIRED BY THE CITY SHALL BE OBTAINED BY THE CONTRACTOR PRIOR TO THE START OF CONSTRUCTION, UNLESS OTHERWISE APPROVED BY THE CITY ENGINEER.

7. THE CONTRACTOR SHALL BE FULLY RESPONSIBLE FOR THE LOCATION AND PROTECTION OF ALL EXISTING UTILITIES. THE CONTRACTOR SHALL VERIFY ALL UTILITY LOCATIONS PRIOR TO CONSTRUCTION BY CALLING UNDERGROUND LOCATE AT 811 A MINIMUM OF 48 HOURS PRIOR TO ANY EXCAVATION WORK.

8. THE CONTRACTOR SHALL BE FULLY RESPONSIBLE FOR TEMPORARY TRAFFIC CONTROL. THE CONTRACTOR SHALL, BY LETTER TO THE CITY ENGINEER, INDICATE THAT WSDOT STANDARD "K" PLANS SHALL BE UTILIZED FOR TEMPORARY TRAFFIC CONTROL. IF THE CURRENT WSDOT STANDARD "K" PLANS ARE NOT UTILIZED, THE CONTRACTOR SHALL PROVIDE A TRAFFIC CONTROL PLAN(S) FOR REVIEW AND APPROVAL BY THE CITY ENGINEER IN ACCORDANCE WITH THE MANUAL ON UNIFORM TRAFFIC CONTROL DEVICES (MUTCD). THE CITY ENGINEER SHALL HAVE FIVE DAYS FOR REVIEW OF ANY PROPOSED TRAFFIC CONTROL PLAN. NO WORK MAY BE CONDUCTED WITHOUT AN APPROVED TRAFFIC CONTROL PLAN.

9. THE CONTRACTOR SHALL HAVE A COPY OF THE APPROVED PLANS AT THE CONSTRUCTION SITE AT ALL TIMES.

10. SPECIAL STRUCTURES SHALL BE INSTALLED PER PLANS AND MANUFACTURER'S RECOMMENDATIONS.

11. ALL DISTURBED AREAS SHALL RECEIVE TEMPORARY AND PERMANENT EROSION CONTROL IN THE FORM OF VEGETATION ESTABLISHMENT SUCH AS GRASS SEEDING. A MEANS SHALL BE ESTABLISHED TO PROTECT THE PERMANENT STORM DRAIN SYSTEM PRIOR TO ESTABLISHMENT OF THE PERMANENT EROSION CONTROL MEASURES. THESE METHODS SHALL BE INCLUDED IN THE EROSION AND SEDIMENT CONTROL PLANS IN ACCORDANCE WITH CHAPTER 6 THE CITY OF PORT ANGELES URBAN SERVICES STANDARDS AND GUIDELINES.

12. CONSTRUCTION WORK HOURS SHALL BE RESTRICTED TO 7 A.M. TO 10 P.M. PRIOR WRITTEN APPROVAL OF THE CITY ENGINEER SHALL BE REQUIRED FOR WORK BETWEEN 10 P.M. AND 7 A.M.; A VARIANCE FROM THE CITY BOARD OF ADJUSTMENT WILL BE REQUIRED TO WORK DURING THESE HOURS. A VARIANCE REQUIRES A MINIMUM OF 60 DAYS TO OBTAIN; THE CONTRACTOR SHALL BE RESPONSIBLE FOR ALL COSTS AND EFFORTS TO OBTAIN THE VARIANCE

13. THE CITY CONSTRUCTION INSPECTOR SHALL BE NOTIFIED A MINIMUM OF 24 HOURS IN ADVANCE OF THE NEED FOR AN INSPECTION.

14. TRAFFIC AND STREET SIGN SLEEVES TO BE PROVIDED BY THE CITY. PRIOR TO POURING CONCRETE, CONTRACTOR TO CONFIRM SLEEVE LOCATIONS, IF ANY, WITH CITY INSPECTOR.

15. PER THE PROVISIONS OF THE CURRENT WSDOT STANDARD SPECIFICATIONS RELATED TO PUBLIC CONVENIENCE AND SAFETY, THE CONTRACTOR SHALL MAINTAIN READY ACCESS TO DRIVEWAYS, HOUSES, AND BUILDINGS ALONG THE LINE OF WORK.

16. A MINIMUM OF ONE WAY TRAVEL THROUGH THE PROJECT AREA SHALL BE MAINTAINED AT ALL TIMES, UNLESS OTHERWISE APPROVED BY THE CITY ENGINEER.

17. SHOULD ACCESS TO A PROPERTY ADJOINING THE PROJECT REQUIRE TEMPORARY CLOSURE ANTICIPATED TO HAVE A DURATION EXCEEDING 15 MINUTES, THE CONTRACTOR SHALL COORDINATE THE TEMPORARY CLOSURE WITH THE PROPERTY OWNER/RESIDENT. A MINIMUM OF 24 HOURS ADVANCE NOTIFICATION SHALL BE PROVIDED TO THE PROPERTY OWNER/RESIDENT PRIOR TO ANY SUCH TEMPORARY CLOSURE.

18. NO LAND DISTURBING ACTIVITY BEYOND TESC BMP INSTALLATION MAY OCCUR ON THE SITE PRIOR TO PASSING A PRE-CONSTRUCTION EROSION AND SEDIMENT CONTROL INSPECTION PERFORMED BY THE CITY. CALL (360) 417-4831 TO SCHEDULE YOUR INSPECTION.

19. ANY MODIFICATION TO THE APPROVED PLAN SET, STORMWATER MANAGEMENT PLAN, STORMWATER POLLUTION PREVENTION PLAN, ENGINEERING REDLINES, OR PERMIT CONDITIONS REQUIRES PRIOR APPROVAL FROM THE CITY ENGINEER.

20. A COMPLETE AND ACCURATE SET OF AS-BUILTS SHALL BE SUBMITTED TO THE CITY ENGINEER IN AN ACCEPTABLE FORM PRIOR TO FINAL INSPECTION SIGN-OFF AND OCCUPANCY.

COVER SHEET & GENERAL NOTES

TITLE: *HORIZON CENTER RELOCATION PROJECT - LOT 15 BLOCK 230 TPA*

CLIENT: *WILLIAM SHORE MEMORIAL POOL DISTRICT*
225 EAST 5TH STREET
PORT ANGELES, WA 98362

ZENOVIC & ASSOCIATES INCORPORATED
301 EAST 6TH ST. SUITE 1
PORT ANGELES, WA 98362
PHONE: (360) 417-0501
FAX: (360) 417-0514
EMAIL: ZENOVIC@ZENOVIC.NET

SCALE: *1"=20'*

DATE: *2/19/2019*

FILE: *17198-E1*

JOB NO: *17198*

SETH J. RODMAN
STATE OF WASHINGTON
53777
REGISTERED
PROFESSIONAL ENGINEER

SHEET 1

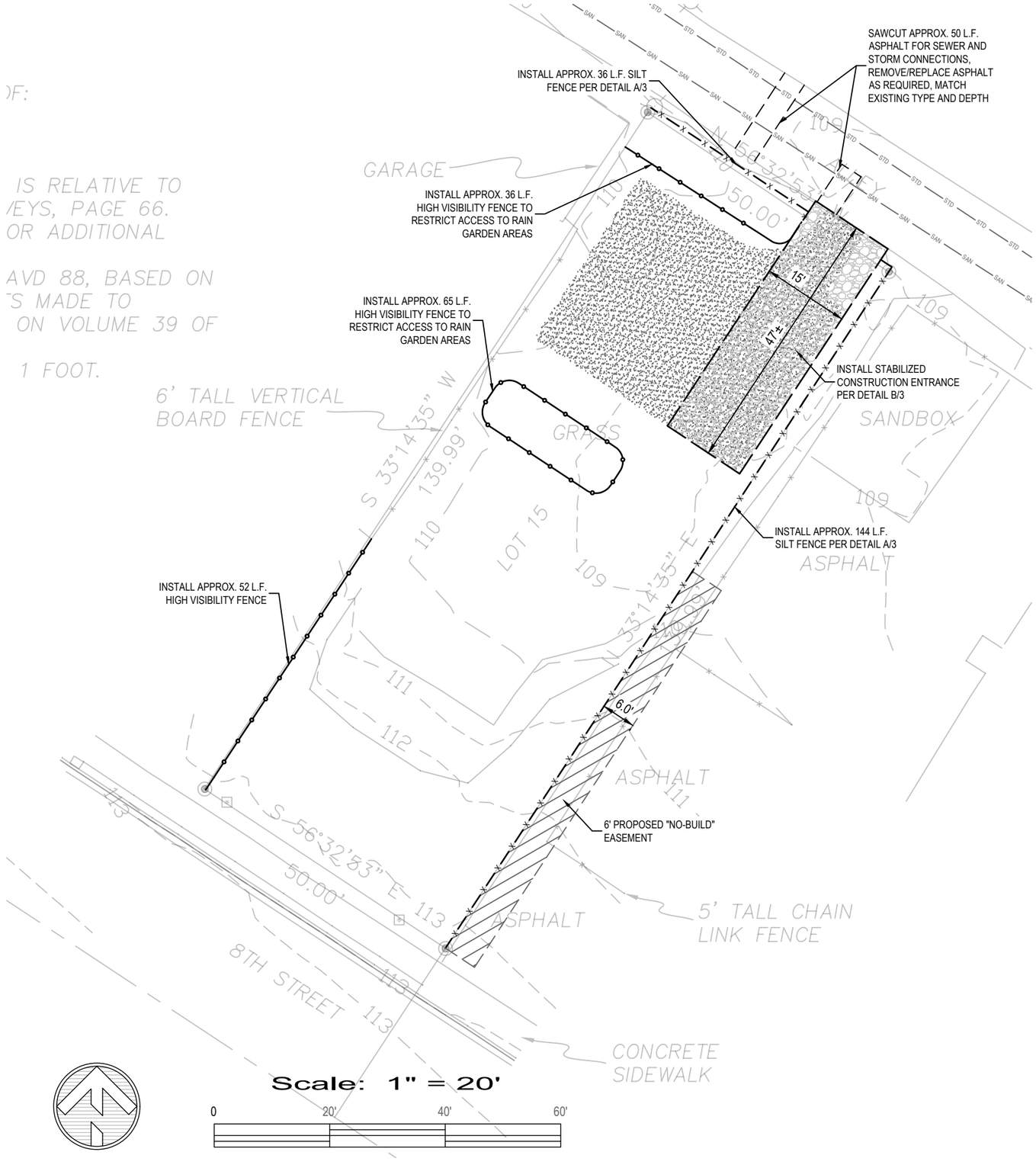

LEGEND (UNLESS OTHERWISE NOTED)

TESC

- SILT FENCE
- HIGH VISIBILITY FENCING
- STABILIZED CONSTRUCTION ENTRANCE

STORM

- EXISTING STORM PIPE
- EXISTING CATCH BASIN
- PROPOSED STORM PIPE
- PROPOSED AREA DRAIN

PAVING & GRADING

- PROPERTY LINE
- BUILDING SETBACK LINE
- 5' PROPOSED CONTOUR
- 1' PROPOSED CONTOUR
- 5' EXISTING CONTOUR
- 1' EXISTING CONTOUR
- PROPOSED GRADE BREAK
- PROPOSED CONCRETE
- PROPOSED ASPHALT

UTILITIES

- EXISTING SANITARY SEWER LINE
- PROPOSED SANITARY SEWER LINE
- EXISTING WATER LINE
- PROPOSED WATER LINE

EROSION CONTROL NOTES:

1. ALL EROSION CONTROL MEASURES SHALL BE CONSTRUCTED AND MAINTAINED IN ACCORDANCE WITH THE REQUIREMENTS OF THE STORMWATER MANAGEMENT MANUAL FOR WESTERN WASHINGTON (ECY, 2012) AND THE PORT ANGELES URBAN SERVICES, STANDARDS AND GUIDELINES (2017) HEREAFTER REFERRED TO AS THE URBAN SERVICES.
2. ALL DISTURBED AREAS, EXCEPT THOSE ON WHICH ACTIVE CONSTRUCTION IS TAKING PLACE, SHALL BE EITHER SEEDED AND MULCHED OR PROTECTED WITH APPROPRIATE PLASTIC SHEETING WITHIN 2 DAYS OF DISTURBANCE BETWEEN OCTOBER 1 AND APRIL 30 AND WITHIN 7 DAYS BETWEEN MAY 1 AND SEPTEMBER 30.
3. STABILIZED CONSTRUCTION ENTRANCE TO BE INSTALLED PRIOR TO CLEARING AND GRADING ACTIVITIES.
4. ALL EROSION CONTROL MEASURES SHALL BE INSPECTED WEEKLY AND AFTER MAJOR STORM EVENTS. ANY DEFICIENCIES SHALL BE REPAIRED IMMEDIATELY.
5. ANY MUD THAT IS CARRIED OFFSITE BY VEHICLE WHEELS AND DEPOSITED ON PUBLIC ROADWAYS SHALL BE CLEANED UP IMMEDIATELY.
6. SAWCUTTING SHALL BE DONE WITH WATER TO PREVENT DUST AND THE RESULTING SLURRY IS TO BE VACUUMED UP IMMEDIATELY.
7. CONCRETE TRUCKS TO WASHOUT IN DESIGNATED CONCRETE WASHOUT AREA IN ACCORDANCE WITH BMP C154.
8. ADJACENT PROPERTIES SHALL BE PROTECTED FROM SEDIMENT DEPOSITION BY APPROPRIATE USE OF VEGETATIVE BUFFER STRIPS, SEDIMENT BARRIERS OR FILTERS, DIKES OR MULCHING, OR BY A COMBINATION OF THESE MEASURES.
9. THE TESC MEASURES SHOWN ON THIS PLAN REPRESENT THE MINIMUM REQUIREMENTS REQUIRED TO COMPLY WITH THE TERMS AND CONDITIONS OF SECTION 6.03.1 OF THE URBAN SERVICES.
10. THE CONTRACTOR SHALL BE RESPONSIBLE TO ENSURE THE EROSION CONTROL MEASURES USED ARE FUNCTIONING EFFECTIVELY AND THE SITE CONTINUALLY COMPLIES WITH THE REQUIREMENTS OF THE URBAN SERVICES.
11. **DISTURBED SOILS ARE TO BE AMENDED PER BMP T5.13.**
12. UPON COMPLETION OF THE PROJECT, ALL DISTURBED AREAS TO BE HYDRO-SEEDED WITH THE LANDSCAPE SEED MIX BELOW UNLESS OTHERWISE SPECIFIED.

LANDSCAPE SEED MIX

SEED TYPE	% WEIGHT	% PURITY	% GERMINATION
PERENNIAL RYE	70	98	90
CHEWINGS AND RED FESCUE BLEND	30	98	85

1. SEED TO BE APPLIED AT A RATE OF 120 lbs/acre.
2. MULCH TO BE APPLIED AT A MIN. RATE OF 1500 lbs/acre WITH 3% TACKIFIER.
3. FERTILIZER (10-4-6 N-P-K) TO BE APPLIED AT A RATE OF 90 lbs/acre.

ZENOVIC & ASSOCIATES INCORPORATED
301 EAST 6TH ST. SUITE 1
PORT ANGELES, WA 98362
PHONE: (360) 417-0501
FAX: (360) 417-0514
E-MAIL: ZENOVIC@ZENOVIC.NET

TEMPORARY EROSION AND SEDIMENTATION CONTROL PLAN

TITLE: *HORIZON CENTER RELOCATION PROJECT - LOT 15 BLOCK 230 TPA*

CLIENT: *WILLIAM SHORE MEMORIAL POOL DISTRICT*
225 EAST 5TH STREET
PORT ANGELES, WA 98362

SCALE: *1"=20'*

DATE: *2/19/2019*

FILE: *17198-E1*

JOB NO: *17198*

SETH J. RODMAN
STATE OF WASHINGTON
53777
REGISTERED
PROFESSIONAL ENGINEER

SHEET 2

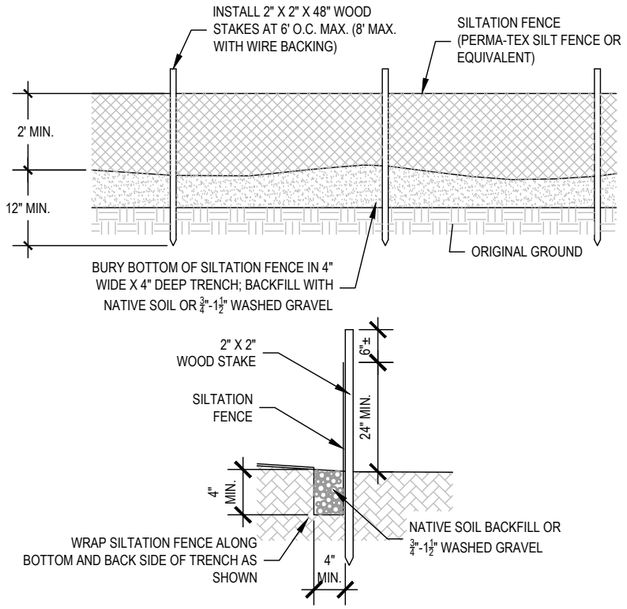

A/3 SILTATION FENCE DETAILS

Scale: NTS

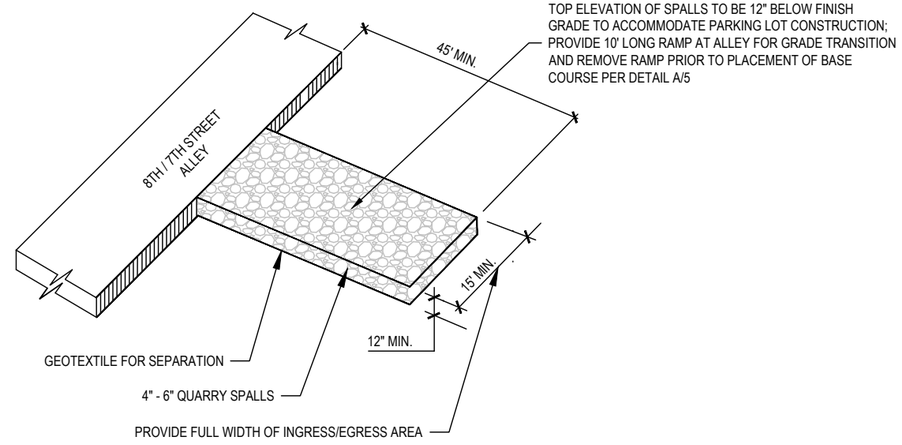

B/3 STABILIZED CONSTRUCTION ENTRANCE

Scale: NTS

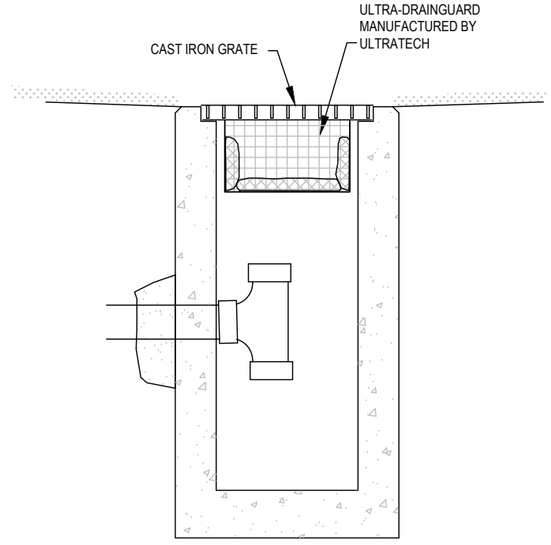

C/3 INLET PROTECTION

Scale: NTS

TITLE: *HORIZON CENTER RELOCATION PROJECT - LOT 15 BLOCK 230 TPA*

TEMPORARY EROSION AND SEDIMENTATION DETAILS

CLIENT: *WILLIAM SHORE MEMORIAL POOL DISTRICT*
225 EAST 5TH STREET
PORT ANGELES, WA 98362

ZENOVIC & ASSOCIATES INCORPORATED
301 EAST 6TH ST. SUITE 1
PORT ANGELES, WA 98362
PHONE: (360) 417-0501
FAX: (360) 417-0514
E-MAIL: ZENOVIC@ZENOVIC.NET

SCALE: *NOT TO SCALE*

DATE: *2/19/2019*

FILE: *17198-E1*

JOB NO: *17198*

SETH J. RODMAN
STATE OF WASHINGTON
53777
REGISTERED
PROFESSIONAL ENGINEER

SHEET **3**

OF

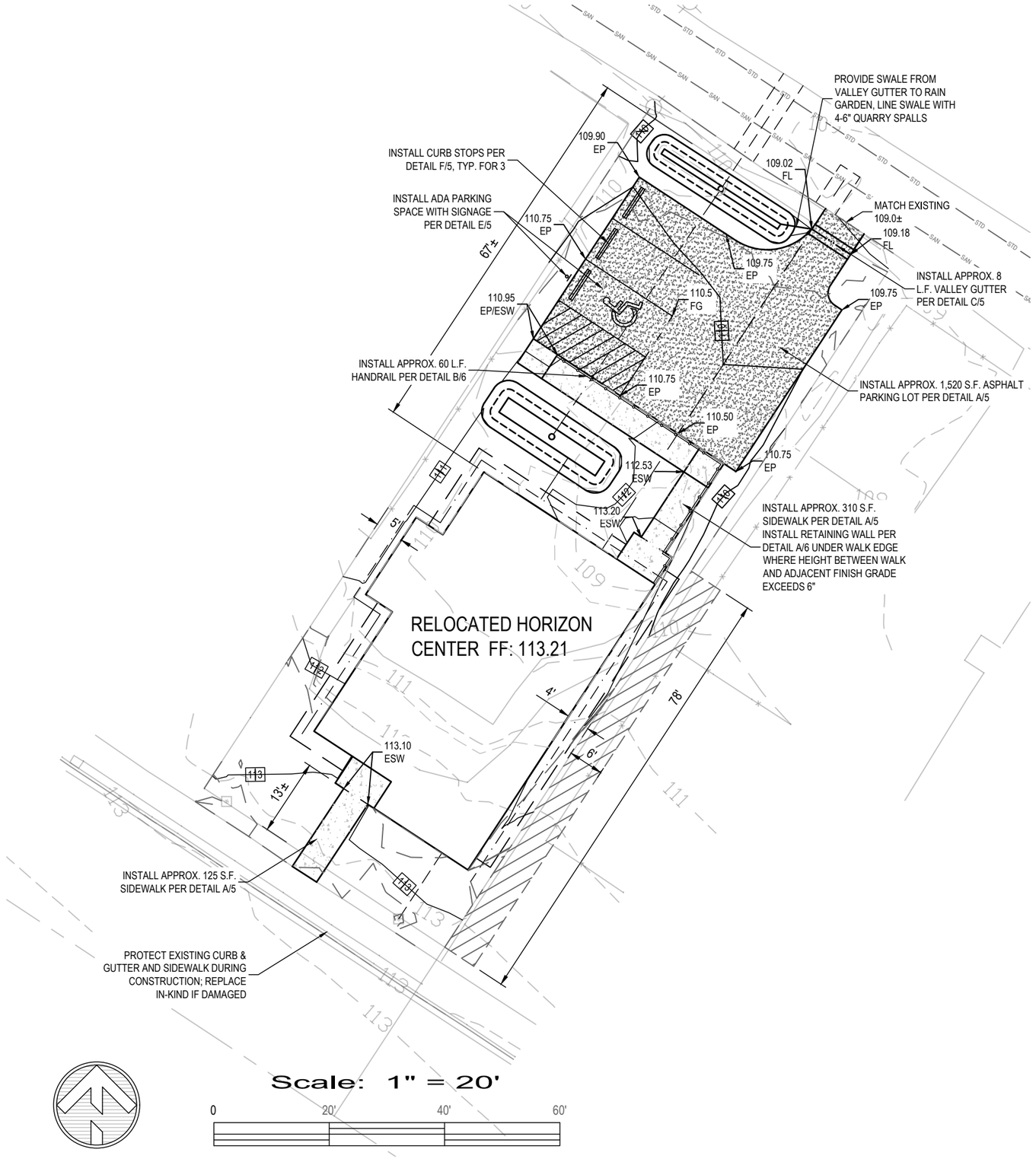

LEGEND (UNLESS OTHERWISE NOTED)

TESC

- SILT FENCE
- HIGH VISIBILITY FENCING
- STABILIZED CONSTRUCTION ENTRANCE

STORM

- EXISTING STORM PIPE
- EXISTING CATCH BASIN
- PROPOSED STORM PIPE
- PROPOSED AREA DRAIN

PAVING & GRADING

- PROPERTY LINE
- BUILDING SETBACK LINE
- 5' PROPOSED CONTOUR
- 1' PROPOSED CONTOUR
- 5' EXISTING CONTOUR
- 1' EXISTING CONTOUR
- PROPOSED GRADE BREAK
- PROPOSED CONCRETE
- PROPOSED ASPHALT

UTILITIES

- EXISTING SANITARY SEWER LINE
- PROPOSED SANITARY SEWER LINE
- EXISTING WATER LINE
- PROPOSED WATER LINE

GENERAL PAVING NOTES:

ALL WORK AND MATERIAL TO BE IN ACCORDANCE WITH CURRENT STANDARD SPECIFICATIONS FOR ROAD, BRIDGE AND MUNICIPIAL CONSTRUCTION, WASHINGTON STATE DEPARTMENT OF TRANSPORTATION.

1. FORMS SHALL BE STEEL. WOOD MAY BE APPROVED FOR AREAS REQUIRING SPECIAL FORMING.
2. FORMS SHALL BE TRUE TO LINE, GRADE & SECURELY STAKED.
3. CONCRETE SHALL BE CEMENT CONCRETE CLASS 3000.
4. HERBICIDE TO BE PLACED UNDER PAVING, CURB AND ADJACENT SIDEWALK PRIOR TO PLACING OF MATERIALS.
5. JOINTS SHALL BE PLACED AT ALL ALLEY AND DRIVEWAY RETURNS, STRUCTURES, CURB RAMPS AND AS SHOWN ON PLANS.
6. ALL JOINTS SHALL BE CLEAN AND EDGED.
7. ALL STRUCTURES TO BE CAST-IN-PLACE UNLESS OTHERWISE INDICATED.
8. SOIL RESIDUAL HERBICIDE SHALL BE PLACED PRIOR TO PAVING, SIDEWALK, CURB AND GUTTER CONSTRUCTION

POINT LEGEND

- ESW: EDGE OF SIDEWALK
- EP: EDGE OF PAVEMENT
- FL: FLOWLINE

PAVING & GRADING PLAN

TITLE: *HORIZON CENTER RELOCATION PROJECT - LOT 15 BLOCK 230 TPA*

CLIENT: *WILLIAM SHORE MEMORIAL POOL DISTRICT*
225 EAST 5TH STREET
PORT ANGELES, WA 98362

ZENOVIC & ASSOCIATES INCORPORATED
301 EAST 6TH ST. SUITE 1
PORT ANGELES, WA 98362
PHONE: (360) 417-0501
FAX: (360) 417-0514
E-MAIL: ZENOVIC@ZENOVIC.NET

SCALE: *1"=20'*

DATE: *2/19/2019*

FILE: *17198-E1*

JOB NO: *17198*

SETH J. RODMAN
STATE OF WASHINGTON
53777
REGISTERED
PROFESSIONAL ENGINEER

SHEET 4

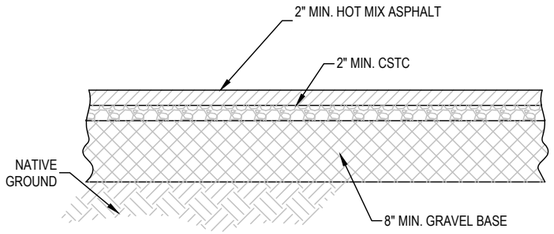

A/5 PARKING LOT SECTION
Scale: N.T.S.

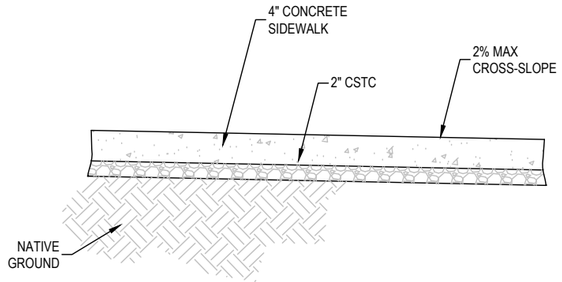

B/5 CONCRETE SIDEWALK SECTION
Scale: N.T.S.

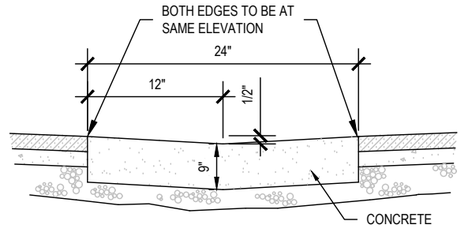

C/5 VALLEY GUTTER
Scale: N.T.S.

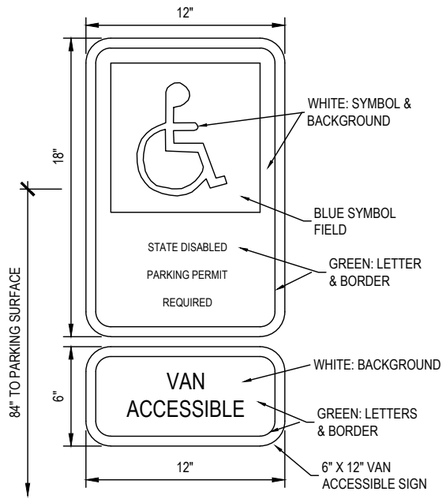

LETTERS SHALL HAVE WIDTH TO HEIGHT RATIO BETWEEN 3:5 AND 1:1 AND A STROKE-WIDTH-TO HEIGHT RATIO BETWEEN 1:5 AND 1:10

D/5 ADA PARKING SIGN
Scale: NTS

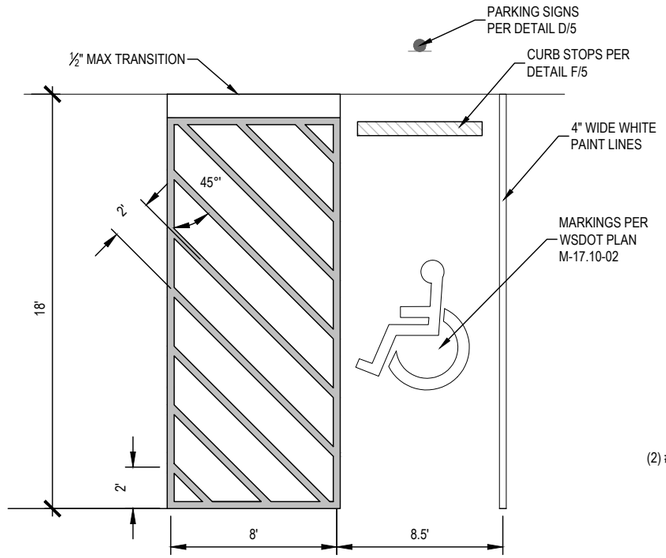

NOTES :

1. *PARKING SPACE AND UNLOADING ZONE SURFACES MUST NOT EXCEED 2% SLOPE IN ANY DIRECTION*

E/5 ADA PARKING STALL
Scale: NTS

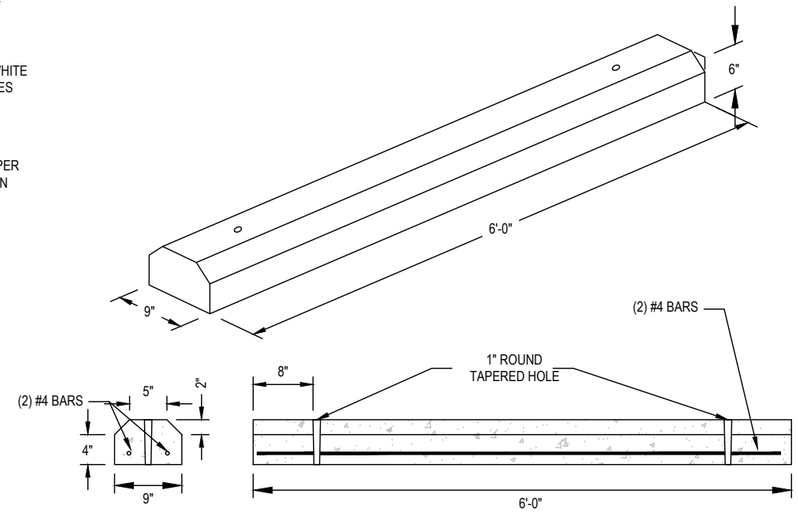

NOTES :

1. *WHEEL STOPS TO BE ANCHORED WITH 18" x ¾" STEEL STAKE*
2. *REINFORCING STEEL TO BE GRADE 60 #4 BAR*

F/5 CURB STOP
Scale: N.T.S.

TITLE: *HORIZON CENTER RELOCATION PROJECT - LOT 15 BLOCK 230 TPA*

PAVING & GRADING DETAILS - 1

CLIENT: *WILLIAM SHORE MEMORIAL POOL DISTRICT*
225 EAST 5TH STREET
PORT ANGELES, WA 98362

ZENOVIC & ASSOCIATES INCORPORATED
301 EAST 6TH ST. SUITE 1
PORT ANGELES, WA 98362
PHONE: (360) 417-0501
FAX: (360) 417-0514
EMAIL: ZENOVIC@ZENOVIC.NET

SCALE: *NOT TO SCALE*

DATE: *2/19/2019*

FILE: *17198-E1*

JOB NO: *17198*

SETH J. RODMAN
STATE OF WASHINGTON
53777
REGISTERED
PROFESSIONAL ENGINEER

SHEET 5

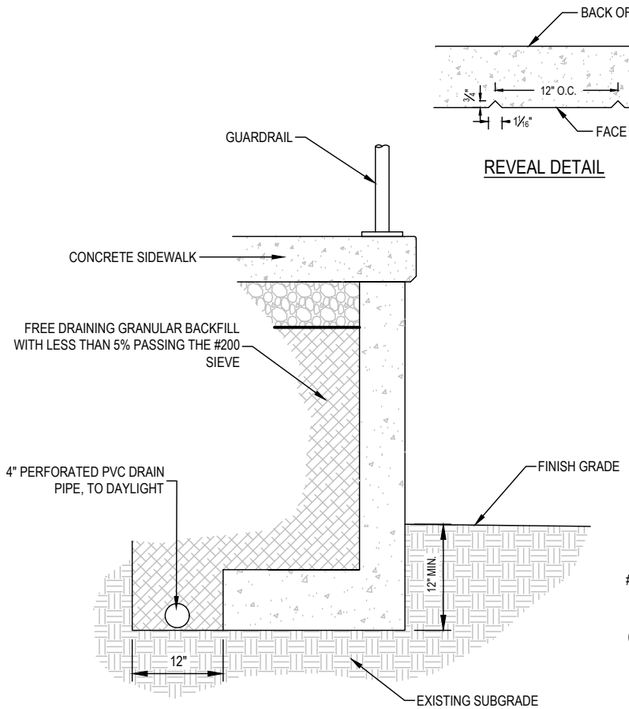

WALL BACKFILL AND DRAINAGE PLAN

NOTES:

1. CONCRETE FOR RETAINING WALL SHALL BE CLASS 3000.
2. ALL REINFORCING STEEL SHALL BE DEFORMED BAR CONFORMING TO ASTM A615/A615m - GRADE 60

A/6 CONCRETE RETAINING WALL

Scale: N.T.S.

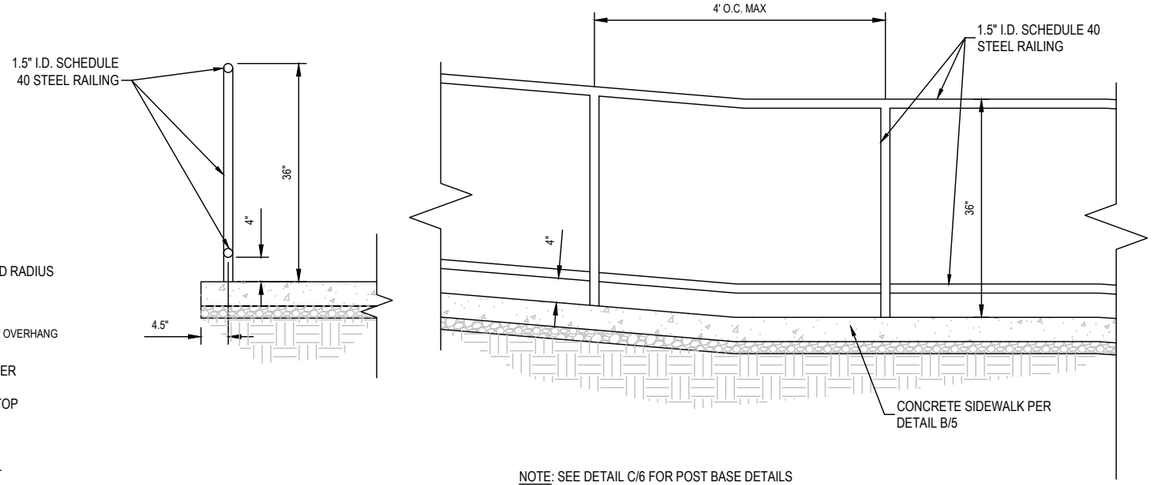

NOTE: SEE DETAIL C/6 FOR POST BASE DETAILS

B/6 HAND RAIL DETAILS

Scale: N.T.S.

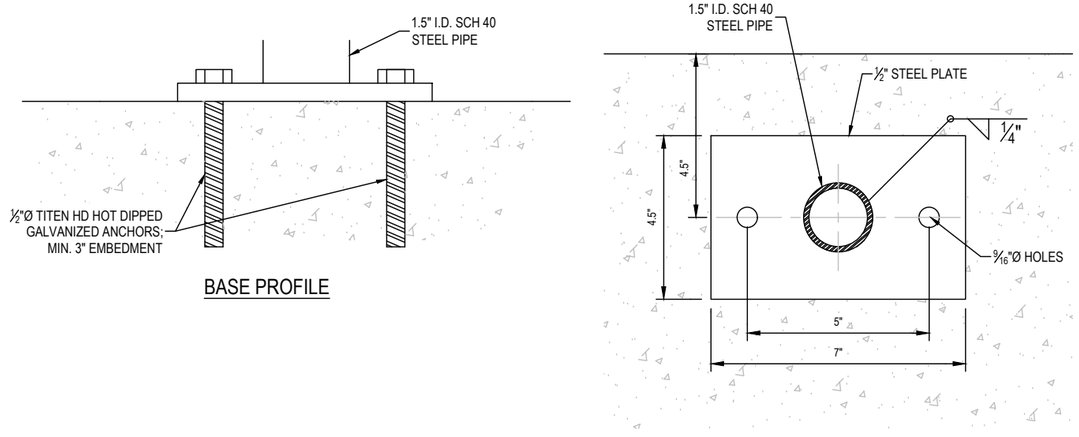

C/6 POST BASE DETAILS

Scale: N.T.S.

PAVING & GRADING DETAILS - 2

TITLE: *HORIZON CENTER RELOCATION PROJECT - LOT 15 BLOCK 230 TPA*

CLIENT: *WILLIAM SHORE MEMORIAL POOL DISTRICT*
225 EAST 5TH STREET
PORT ANGELES, WA 98362

ZENOVIC & ASSOCIATES INCORPORATED
301 EAST 6TH ST. SUITE 1
PORT ANGELES, WA 98362
PHONE: (360) 417-0501
FAX: (360) 417-0514
EMAIL: ZENOVIC@ZENOVIC.NET

SCALE: *NOT TO SCALE*

DATE: *2/19/2019*

FILE: *17198-E1*

JOB NO: *17198*

SETH J. RODMAN
STATE OF WASHINGTON
53777
REGISTERED
PROFESSIONAL ENGINEER

SHEET 6

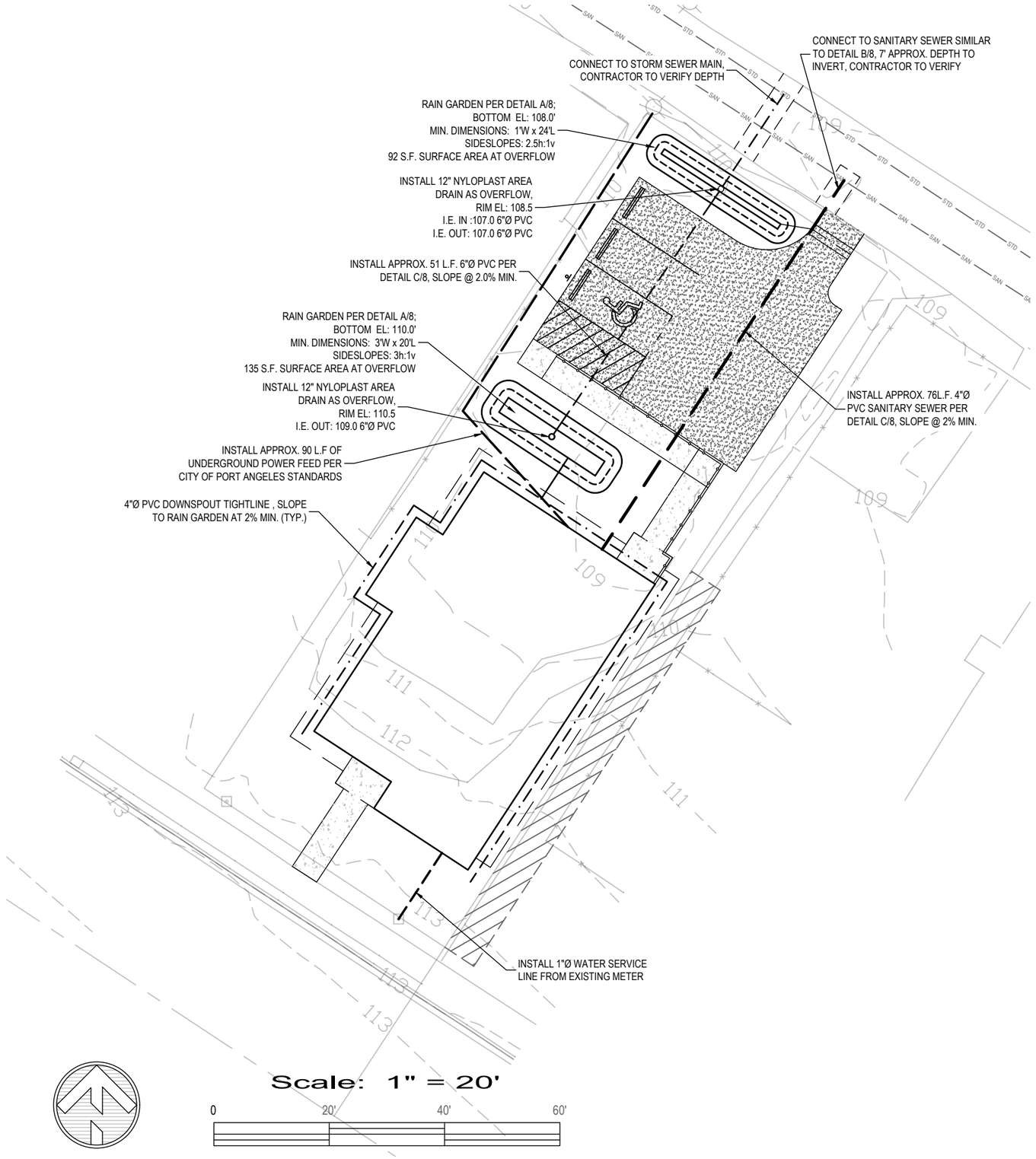

LEGEND (UNLESS OTHERWISE NOTED)

TESC

- SILT FENCE
- HIGH VISIBILITY FENCING
- STABILIZED CONSTRUCTION ENTRANCE

STORM

- EXISTING STORM PIPE
- EXISTING CATCH BASIN
- PROPOSED STORM PIPE
- PROPOSED AREA DRAIN

PAVING & GRADING

- PROPERTY LINE
- BUILDING SETBACK LINE
- 5' PROPOSED CONTOUR
- 1' PROPOSED CONTOUR
- 5' EXISTING CONTOUR
- 1' EXISTING CONTOUR
- PROPOSED GRADE BREAK
- PROPOSED CONCRETE
- PROPOSED ASPHALT

UTILITIES

- EXISTING SANITARY SEWER LINE
- PROPOSED SANITARY SEWER LINE
- EXISTING WATER LINE
- PROPOSED WATER LINE

GENERAL STORMWATER NOTES:

1. ALL STORM DRAIN MAINS SHALL BE HIGH VELOCITY CLEANED AND LOW PRESSURE TESTED IN ACCORDANCE WITH WSDOT/APWA SPECIFICATIONS PRIOR TO FINAL PAVING.
2. STORM DRAIN PIPING IN TRAFFIC AREAS TO CONFORM TO THE REQUIREMENTS OF ASTM D3034, SDR 35.
3. PRIOR TO BACKFILLING, ALL STORM DRAINS AND APPURTENANCES SHALL BE INSPECTED AND APPROVED BY THE CITY'S INSPECTOR. APPROVAL SHALL NOT RELIEVE THE CONTRACTOR FOR CORRECTION OF ANY DEFICIENCIES AND/OR FAILURE AS DETERMINED BY SUBSEQUENT TESTING AND INSPECTIONS. IT SHALL BE THE CONTRACTOR'S RESPONSIBILITY TO NOTIFY THE CITY FOR THE REQUIRED INSPECTIONS.
4. SPECIAL STRUCTURES, OIL/WATER SEPARATORS AND OUTLET CONTROLS SHALL BE INSTALLED PER PLANS AND MANUFACTURERS' RECOMMENDATIONS.
5. THE CITY CONSTRUCTION INSPECTOR SHALL BE NOTIFIED A MINIMUM OF 48 HOURS IN ADVANCE OF A TAP CONNECTION TO AN EXISTING STORM MAIN.THE INSPECTOR SHALL BE PRESENT AT THE TIME OF THE TAP.

UTILITY PLAN

TITLE: *HORIZON CENTER RELOCATION PROJECT - LOT 15 BLOCK 230 TPA*

CLIENT: *WILLIAM SHORE MEMORIAL POOL DISTRICT*
225 EAST 5TH STREET
PORT ANGELES, WA 98362

ZENOVIC & ASSOCIATES INCORPORATED
301 EAST 6TH ST. SUITE 1
PORT ANGELES, WA 98362
PHONE: (360) 417-0501
FAX: (360) 417-0514
E-MAIL: ZENOVIC@ZENOVIC.NET

SCALE: *1"=20'*

DATE: *2/20/2019*

FILE: *17198-E1*

JOB NO: *17198*

SETH J. RODMAN
STATE OF WASHINGTON
53777
REGISTERED
PROFESSIONAL ENGINEER

SHEET 7

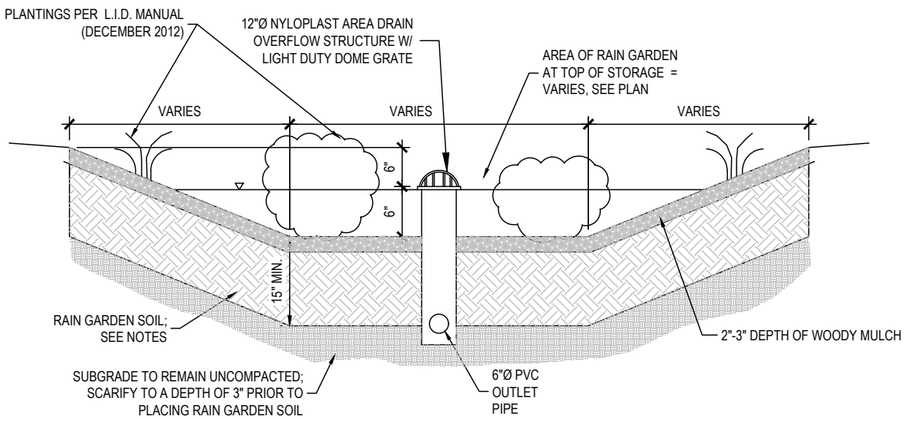

RAIN GARDEN SOIL NOTES

1. SOIL MIX TO CONSIST OF 60-65% MINERAL AGGREGATE AND 35-40% COMPOST
2. MINERAL AGGREGATE TO BE WELL-GRADED SAND SUBSTANTIALLY CONFORMING THE THE BELOW GRADING AND WITH THE FOLLOWING GRADING COEFFICIENTS:
   - 2.1. COEFFICIENT OF UNIFORMITY: EQUAL TO OR GREATER THAN 4
   - 2.2. COEFFICIENT OF CURVE: GREATER THAN OR EQUAL TO 1 AND LESS THAN OR EQUAL TO 3
3. ORGANIC MATTER CONTENT OF MIX BY WEIGHT: 5-8%
4. CATION EXCHANGE CAPACITY MUST BE GREATER THAN OR EQUAL TO 5 MILLIEQUIVALENTS PER 100 GRAMS OF DRY SOIL
5. COMPOST MEET THE FOLLOWING REQUIREMENTS:
   - 5.1. MEET THE DEFINITION OF "COMPOSTED MATERIALS" IN WAC 173-350-220 (INCLUDING CONTAINMENT LEVELS AND OTHER STANDARDS)
   - 5.2. BE PRODUCED AT A COMPOSTING FACILITY PERMITTED BY THE WASHINGTON STATE DEPARTMENT OF ECOLOGY.
   - 5.3. MUST ORIGINATE FROM A MINIMUM OF 65% BY VOLUME RECYCLED PLANT WASTE AS DEFINED IN WAC 173-350-100 AS "TYPE 1 FEEDSTOCKS". A MAXIMUM OF 35% BY VOLUME OF OTHER APPROVED ORGANIC WASTE AS DEFINED IN WAC 173-350-100 AS "TYPE III", INCLUDING POST-CONSUMER FOOD WASTE, BUT NOT INCLUDING BIO-SOLIDS MAY BE SUBSTITUTED FOR RECYCLED PLANT WASTE.
   - 5.4. MOISTURE CONTENT RANGE: NO VISIBLE FREE WATER OR DUST PRODUCED WHEN HANDLING.
   - 5.5. TESTED IN ACCORDANCE WITH U.S. COMPOSTING COUNCIL "TESTING METHODS FOR EXAMINATION OF COMPOST AND COMPOSTING" (TMECC), AS ESTABLISHED IN THE COMPOSTING COUNCIL'S "SEAL OF TESTING ASSURANCE" (STA) PROGRAM.
   - 5.6. SCREENED TO SIZE FOR FINE COMPOST UNDER TMECC TEST METHOD 02.02-B.
   - 5.7. pH BETWEEN 6.0 AND 8.5.
   - 5.8. MANUFACTURED INERT CONTENT LESS THAN 1% BY WEIGHT.
   - 5.9. MINIMUM ORGANIC CONTENT OF 40%.
   - 5.10. SOLUBLE SALT CONTENT LESS THAN 4.0 mmhos/cm.
   - 5.11. MATURITY GREATER THAN 80%.
   - 5.12. STABILITY OF 7 OR BELOW.
   - 5.13. C:N RATION OF LESS THAN 25:1. C:N RATIO MAY BE UP TO 35:1 FOR PLANTINGS COMPOSED ENTIRELY OF PUGET SOUND LOWLAND NATIVE SPECIES AND UP TO 40:1 FOR COARSE COMPOST USED AS SURFACE MULCH (NOT IN SOIL MIX).

MINERAL AGGREGATE SPECIFICATION

SIEVE SIZE	PERCENT PASSING
3/8	100
#4	95-100
#10	75-90
#40	25-40
#100	4-10
#200	2-5

A/8 RAIN GARDEN DETAILS

Scale: NTS

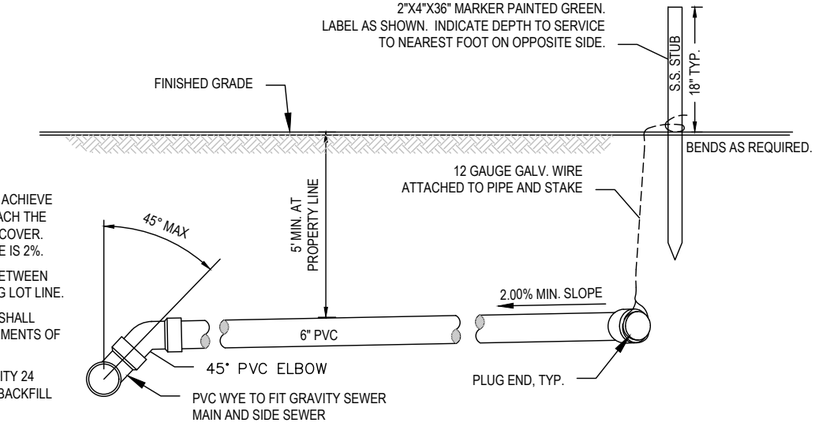

NOTES:

1. ROTATE THE 45° ELBOW TO ACHIEVE THE PROPER ANGLE TO REACH THE PROPERTY LINE WITH 5' OF COVER. MINIMUM ALLOWABLE SLOPE IS 2%.
2. 3' MINIMUM SEPARATION BETWEEN SIDE SEWER AND ADJOINING LOT LINE.
3. SEWER PIPE AND FITTINGS SHALL CONFORM TO THE REQUIREMENTS OF ASTM D 3034 SDR 35.
4. CALL FOR INSPECTION BY CITY 24 HOURS PRIOR TO PLACING BACKFILL

ALL WORK AND MATERIAL TO BE IN ACCORDANCE WITH THE CURRENT WASHINGTON STATE DEPARTMENT OF TRANSPORTATION "STANDARD SPECIFICATIONS FOR ROAD, BRIDGE, AND MUNICIPAL CONSTRUCTION"

B/8 SINGLE SEWER SERVICE

Scale: NTS

NOTES:

1. ACP PATCH SHALL BE ROLLED AND NOT VIBRATED.
2. TO BE USED FOR ALL PAVED STREETS AD ALLEYS. BACKFILL LOCATION TO 1'-0" BEHIND CURB OR EDGE OF PAVING UNLESS OTHERWISE APPROVED IN ADVANCE BY CITY ENGINEER.
3. WHERE CONCRETE PAVEMENT JOINT IS LESS THAN 4'-0" FROM SAWCUT, THE PAVEMENT SHALL BE REMOVED TO THAT JOINT.
4. TEMPORARY PATCHING WITH ASPHALT OR PLACEMENT OF STEEL PLATES IS REQUIRED WHEN TRAFFIC WILL CROSS CDF FOR MORE THAN 24 HOURS WITHOUT PERMANENT RESTORATION. STEEL PLATES SHALL HAVE COLD PATCH WEDGES ON TRAFFIC EDGES.
5. CALL FOR INSPECTION BY CITY 24 HOURS PRIOR TO PLACING PIPE ZONE BACKFILL AND PRIOR TO PLACEMENT OF CDF BACKFILL

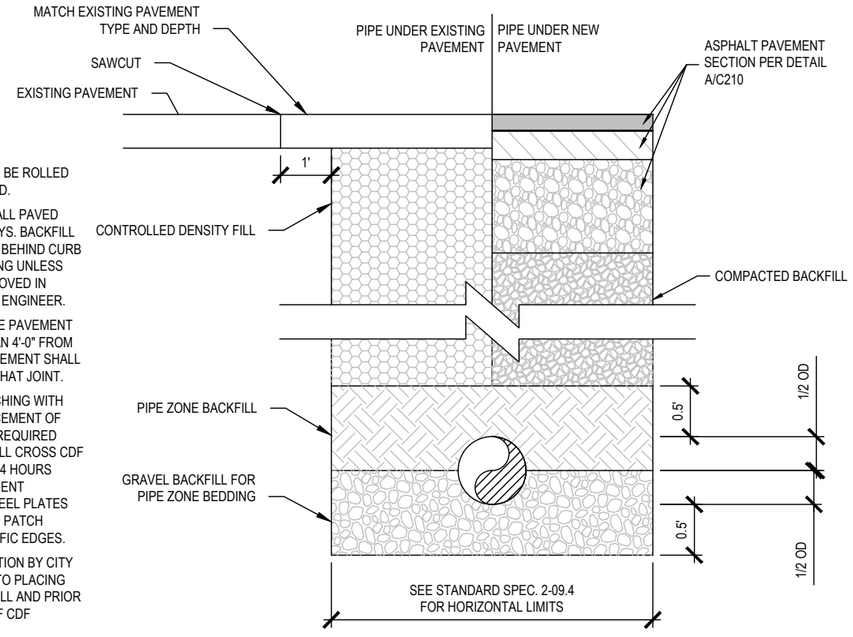

C/8 PIPE INSTALLATION NOTES & DETAIL

Scale: NTS

TITLE: *HORIZON CENTER RELOCATION PROJECT - LOT 15 BLOCK 230 TPA*

UTILITY DETAILS

CLIENT:
WILLIAM SHORE MEMORIAL POOL DISTRICT
225 EAST 5TH STREET
PORT ANGELES, WA 98362

ZENOVIC & ASSOCIATES INCORPORATED
301 EAST 6TH ST. SUITE 1
PORT ANGELES, WA 98362
PHONE: (360) 417-0501
FAX: (360) 417-0514
E-MAIL: ZENOVIC@ZENOVIC.NET

SCALE: *NOT TO SCALE*

DATE: *2/19/2019*

FILE: *17198-E1*

JOB NO: *17198*

SETH J. RODMAN
STATE OF WASHINGTON
53777
REGISTERED
PROFESSIONAL ENGINEER

SHEET
8

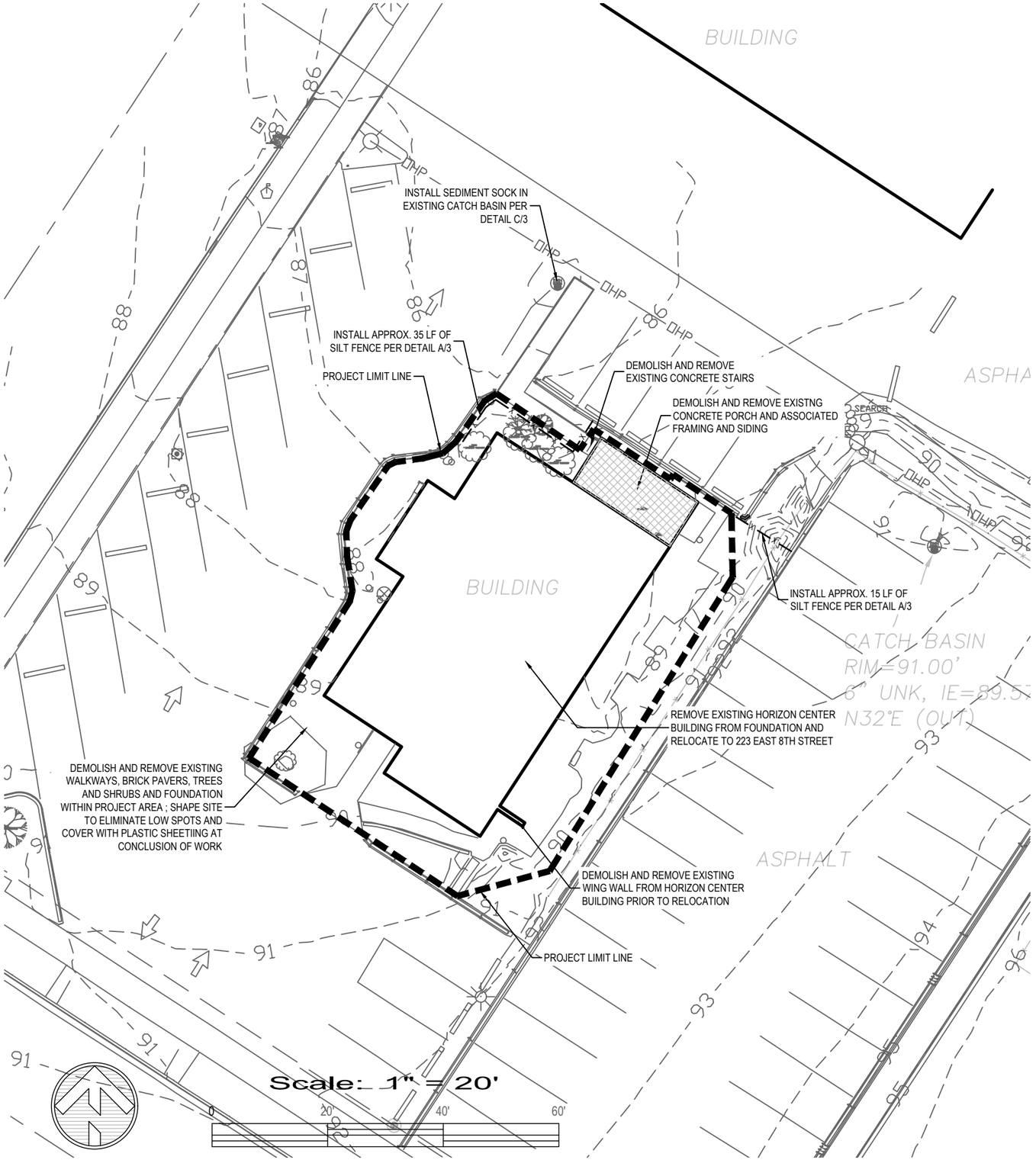

LEGEND (UNLESS OTHERWISE NOTED)

TESC

- SILT FENCE
- HIGH VISIBILITY FENCING
- STABILIZED CONSTRUCTION ENTRANCE

STORM

- EXISTING STORM PIPE
- EXISTING CATCH BASIN
- PROPOSED STORM PIPE
- PROPOSED AREA DRAIN

PAVING & GRADING

- PROPERTY LINE
- BUILDING SETBACK LINE
- 5' PROPOSED CONTOUR
- 1' PROPOSED CONTOUR
- 5' EXISTING CONTOUR
- 1' EXISTING CONTOUR
- PROPOSED GRADE BREAK
- PROPOSED CONCRETE
- PROPOSED ASPHALT

UTILITIES

- EXISTING SANITARY SEWER LINE
- PROPOSED SANITARY SEWER LINE
- EXISTING WATER LINE
- PROPOSED WATER LINE

EROSION CONTROL NOTES:

1. ALL EROSION CONTROL MEASURES SHALL BE CONSTRUCTED AND MAINTAINED IN ACCORDANCE WITH THE REQUIREMENTS OF THE STORMWATER MANAGEMENT MANUAL FOR WESTERN WASHINGTON (ECY, 2012) AND THE PORT ANGELES URBAN SERVICES, STANDARDS AND GUIDELINES (2017) HEREAFTER REFERRED TO AS THE URBAN SERVICES.
2. ALL DISTURBED AREAS, EXCEPT THOSE ON WHICH ACTIVE CONSTRUCTION IS TAKING PLACE, SHALL BE EITHER SEEDED AND MULCHED OR PROTECTED WITH APPROPRIATE PLASTIC SHEETING WITHIN 2 DAYS OF DISTURBANCE BETWEEN OCTOBER 1 AND APRIL 30 AND WITHIN 7 DAYS BETWEEN MAY 1 AND SEPTEMBER 30.
3. STABILIZED CONSTRUCTION ENTRANCE TO BE INSTALLED PRIOR TO CLEARING AND GRADING ACTIVITIES.
4. ALL EROSION CONTROL MEASURES SHALL BE INSPECTED WEEKLY AND AFTER MAJOR STORM EVENTS. ANY DEFICIENCIES SHALL BE REPAIRED IMMEDIATELY.
5. ANY MUD THAT IS CARRIED OFFSITE BY VEHICLE WHEELS AND DEPOSITED ON PUBLIC ROADWAYS SHALL BE CLEANED UP IMMEDIATELY.
6. SAWCUTTING SHALL BE DONE WITH WATER TO PREVENT DUST AND THE RESULTING SLURRY IS TO BE VACUUMED UP IMMEDIATELY.
7. CONCRETE TRUCKS TO WASHOUT IN DESIGNATED CONCRETE WASHOUT AREA IN ACCORDANCE WITH BMP C154.
8. ADJACENT PROPERTIES SHALL BE PROTECTED FROM SEDIMENT DEPOSITION BY APPROPRIATE USE OF VEGETATIVE BUFFER STRIPS, SEDIMENT BARRIERS OR FILTERS, DIKES OR MULCHING, OR BY A COMBINATION OF THESE MEASURES.
9. THE TESC MEASURES SHOWN ON THIS PLAN REPRESENT THE MINIMUM REQUIREMENTS REQUIRED TO COMPLY WITH THE TERMS AND CONDITIONS OF SECTION 6.03.1 OF THE URBAN SERVICES.
10. THE CONTRACTOR SHALL BE RESPONSIBLE TO ENSURE THE EROSION CONTROL MEASURES USED ARE FUNCTIONING EFFECTIVELY AND THE SITE CONTINUALLY COMPLIES WITH THE REQUIREMENTS OF THE URBAN SERVICES.
11. **DISTURBED SOILS ARE TO BE AMENDED PER BMP T5.13.**
12. UPON COMPLETION OF THE PROJECT, ALL DISTURBED AREAS TO BE HYDRO-SEEDED WITH THE LANDSCAPE SEED MIX BELOW UNLESS OTHERWISE SPECIFIED.

LANDSCAPE SEED MIX

SEED TYPE	% WEIGHT	% PURITY	% GERMINATION
PERENNIAL RYE	70	98	90
CHEWINGS AND RED FESCUE BLEND	30	98	85

1. SEED TO BE APPLIED AT A RATE OF 120 lbs/acre.
2. MULCH TO BE APPLIED AT A MIN. RATE OF 1500 lbs/acre WITH 3% TACKIFIER.
3. FERTILIZER (10-4-6 N-P-K) TO BE APPLIED AT A RATE OF 90 lbs/acre.

TITLE: *HORIZON CENTER RELOCATION PROJECT - LOT 15 BLOCK 230 TPA*

HORIZON CENTER DEMOLITION AND TEMPORARY EROSION AND SEDIMENTATION CONTROL PLAN

CLIENT: *WILLIAM SHORE MEMORIAL POOL DISTRICT*
225 EAST 5TH STREET
PORT ANGELES, WA 98362

ZENOVIC & ASSOCIATES INCORPORATED
301 EAST 6TH ST. SUITE 1
PORT ANGELES, WA 98362
PHONE: (360) 417-0501
FAX: (360) 417-0514
E-MAIL: ZENOVIC@ZENOVIC.NET

SCALE: *1"=20'*

DATE: *2/21/2019*

FILE: *17198-E1*

JOB NO: *17198*

SETH J. RODMAN
STATE OF WASHINGTON
53777
REGISTERED
PROFESSIONAL ENGINEER

SHEET
9