CAROLINA

Micro Brewing Technology

FEATURES:

-Mash/Lauter tun vessel(Upper)
-Whirlpool tank vessel(Lower/ HLT available for alternative plan)
-Brew kettle vessel
-UL listed motor with mash rack (SEW gear available)
-UL listed VFD pumps (Ampco products available)
-Heat exchanger with wort aeration assembly.
-Stainless steel brewhouse work platform & stairs
-CIP assembly
-RTD sensor ports
-Sparge ring with sprayers
-Complete sanitary SS hard piping
-Necessary tri-clamp fittings and 1.5" butterfly valves (DIN fitting optional)
-Steam jacketed/gas fired/electric heating available
-Grist case/hopper (Optional)
- External wort grant(Optional)
- Hop back(Optional)
-Brew kettle condensate collector(Optional)

We strive to be: "Your Most Reliable Brewing Partner"

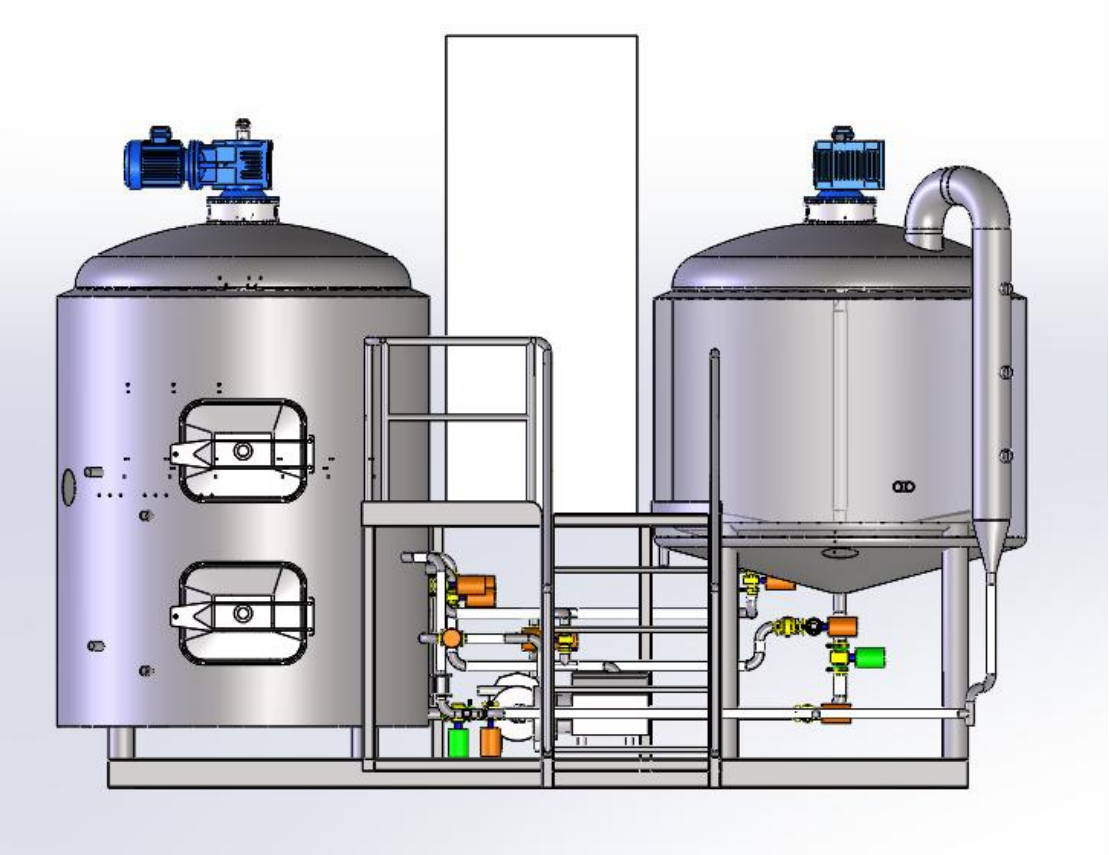

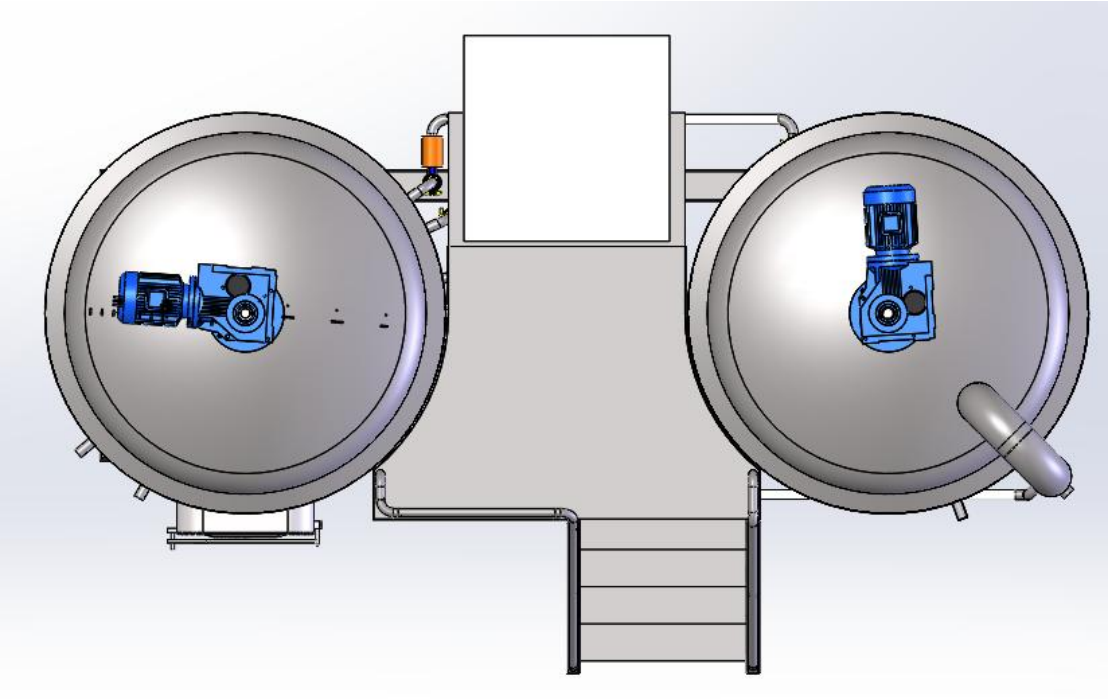

Terms:

* Production started after 30% of total amount received as deposit.
* Balance should be paid before shipping.

Shipping:

* FOB Ningbo port
* Around 20days to west coast of US 30days to east coast.

Warranty:

*3 Years warranty for non-man caused damages of stainless steel vessels
*1 Year warranty for all electronic parts and components.

Production:

*All the equipment is designed and produced from our self-owned factory in Ningbo, China. Our technical team is led by brewers, engineers and technicians with decades of professional experience in the industry.